Louis A Lalonde.

TRANE CENTRIFUGAL FANS

BULLETIN No A18-1 JANUARY 1947

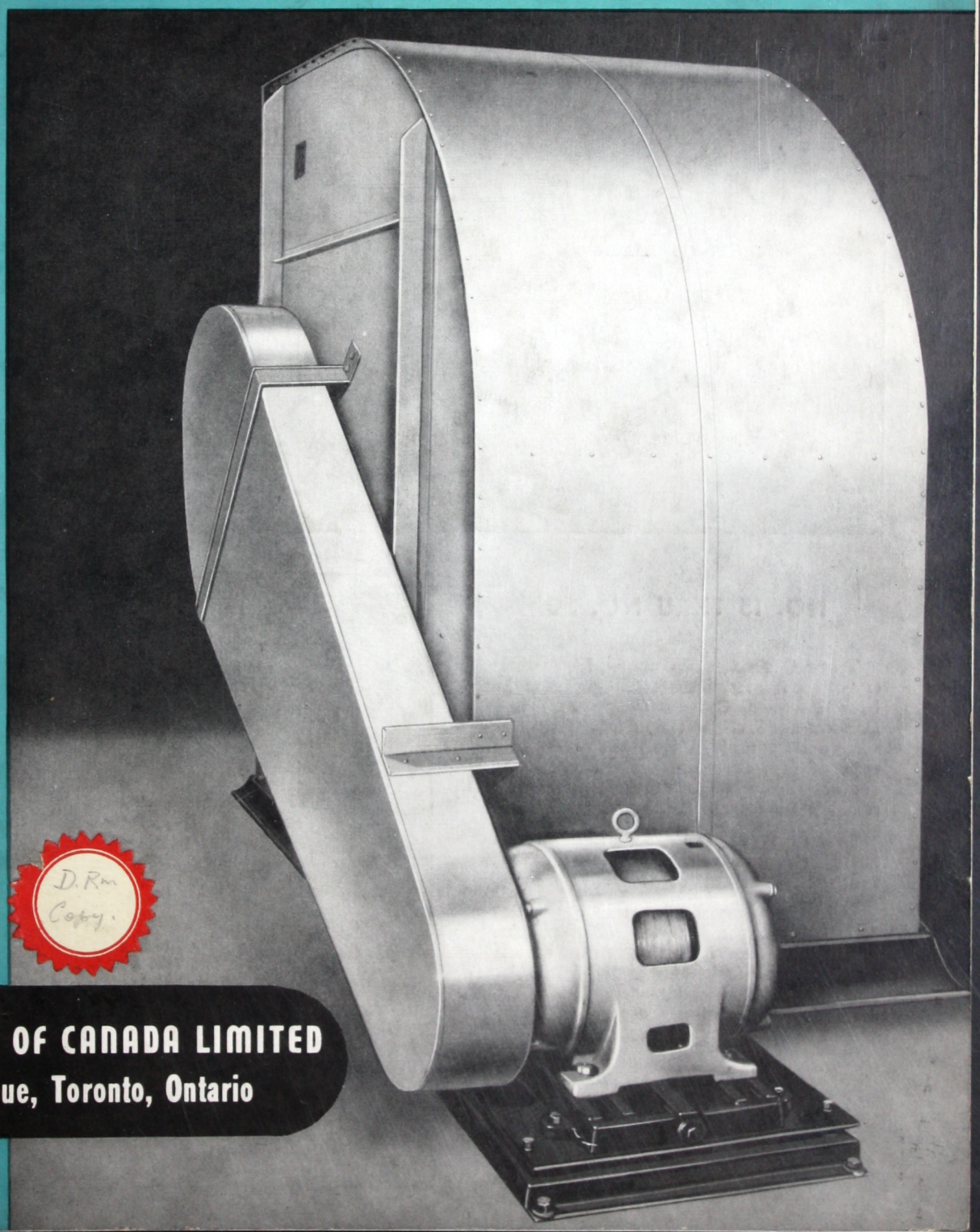

TRANE

* HEATING * COOLING

* AIR CONDITIONING

D. Rm Copy.

TRANE COMPANY OF CANADA LIMITED
4 Mowat Avenue, Toronto, Ontario

TRANE FANS

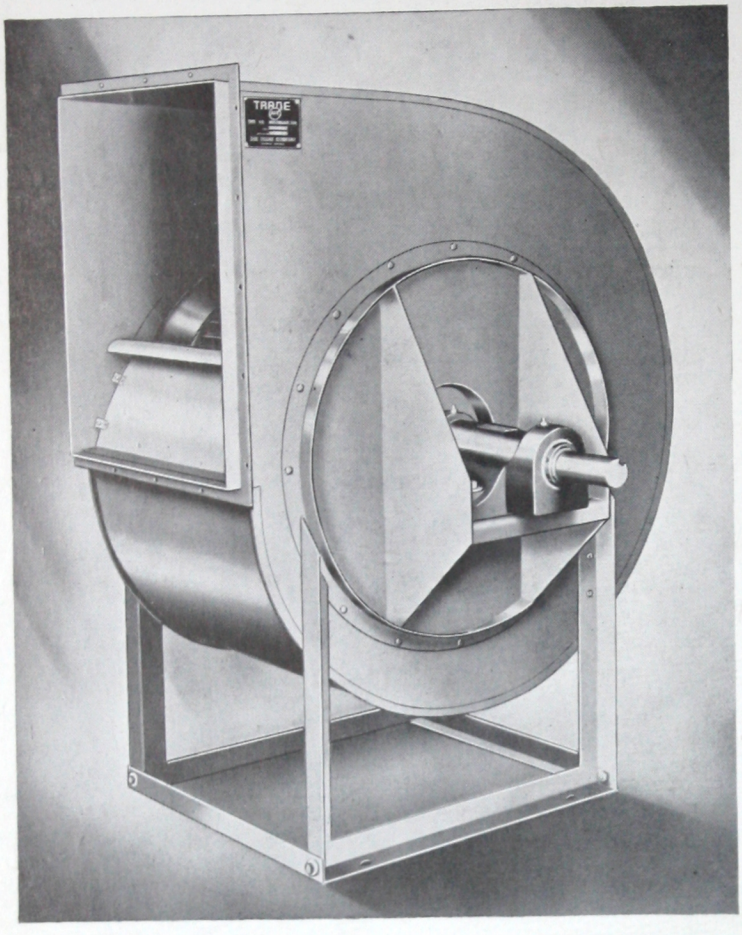

NO. 8 THRU NO. 30

The Trane Company of Canada, Limited, manufactures a complete line of fans for heating, ventilating, air conditioning and air handling applications.

The fan illustrated on the left shows the lockseam construction typical of units with wheels of 30″ or less.

The fans, numbering 8 thru 30 may have Single Width Wheels with Single Inlets or Double Width Wheels with Double Inlets.

This unit has Drive Arrangement 2—a belt drive arrangement used only on smaller size single inlet fans.

Top Horizontal Discharge is illustrated but on all fans of this size the direction of discharge can easily be converted.

Small **FC**

FIGURE 1

NO. 15 THRU NO. 30

Trane Company of Canada, Limited, is one of the few fan manufacturers who make both Forward Curved (Type FC) and Backwardly Inclined (BI) Fans. While in some cases it may be possible to use either type of fan, each has definite operating characteristics which particularly recommend it for certain types of installations.

In sizes ranging from 15 thru 30 BI Fans are constructed with a lockseam housing that makes the unit air tight.

Drive Arrangement 3, the most popular for all belt driven fans, is used on the fan illustrated here. Direction of discharge is vertically up—designated as "Up-Blast" by the National Association of Fan Manufacturers. Direction of discharge is easily converted to any standard discharge.

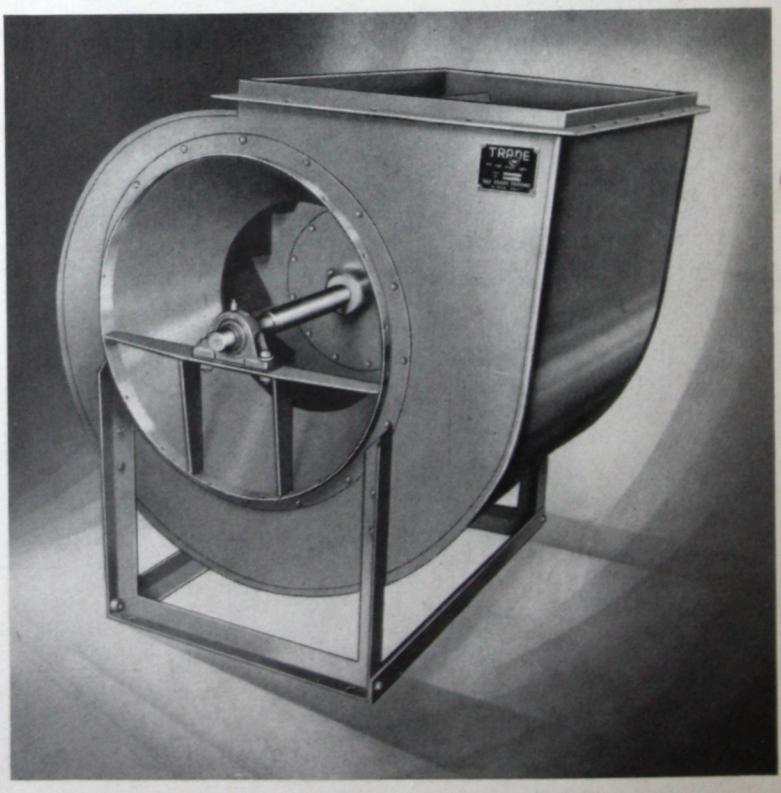

Small **BI**

FIGURE 2

TRANE FANS

NO. 33 THRU NO. 60

Forward Curved Fans of the construction shown here are available with wheel diameters ranging from 33-60 inches in single or double width. The low tip speeds which characterize FC wheels make these units particularly desirable for installations where extremely quiet operation is necessary.

The housing design shown here provides a complete girder of steel angles. To this sturdy frame the sheet steel housing is securely bolted. Sides and scroll continue to the floor to form a durable box-like housing.

Fans of this size are built to serve a specific installation and cannot be converted. The direction of discharge on unit shown is Bottom Horizontal. Drive Arrangement 3.

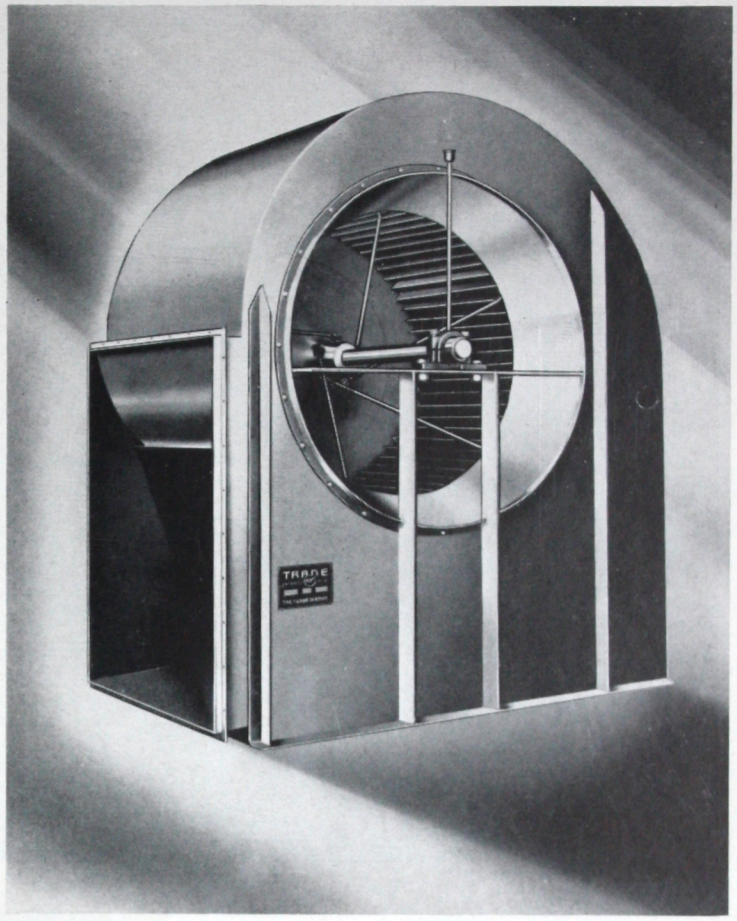

Medium **FC**

FIGURE 3

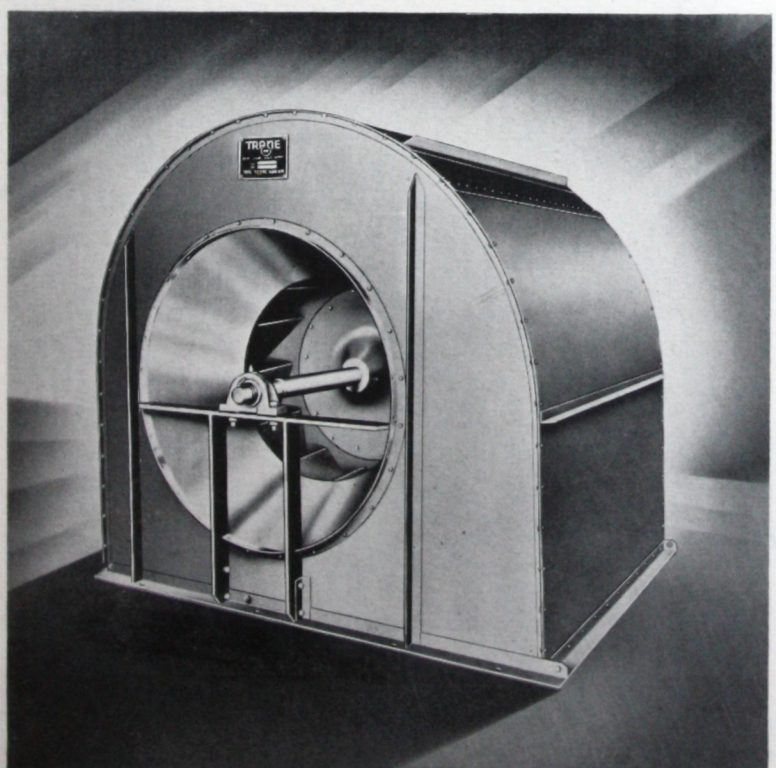

NO. 33 THRU NO. 60

All fans in the Trane line are the products of Trane design and engineering skill. Their trim, neat appearance and quality workmanship reflect the vast experience of Trane craftsmen. Only the finest materials are used in their fabrication.

With these propositions definitely established the final over-all results—outstanding value and exceptional service—are only logical.

The unit illustrated is a Backwardly Inclined Single Width, Single Inlet Fan with Drive Arrangement 3. Down Blast Discharge.

Housing construction shown is typical of all BI Fans with wheel diameters 33 thru 60 inches. Sheet steel sides and scroll are bolted to a framework of steel angles which not only strengthens the unit but also provides a continuous metal-to-metal air seal around the entire housing.

Medium **BI**

FIGURE 4

TRANE FANS

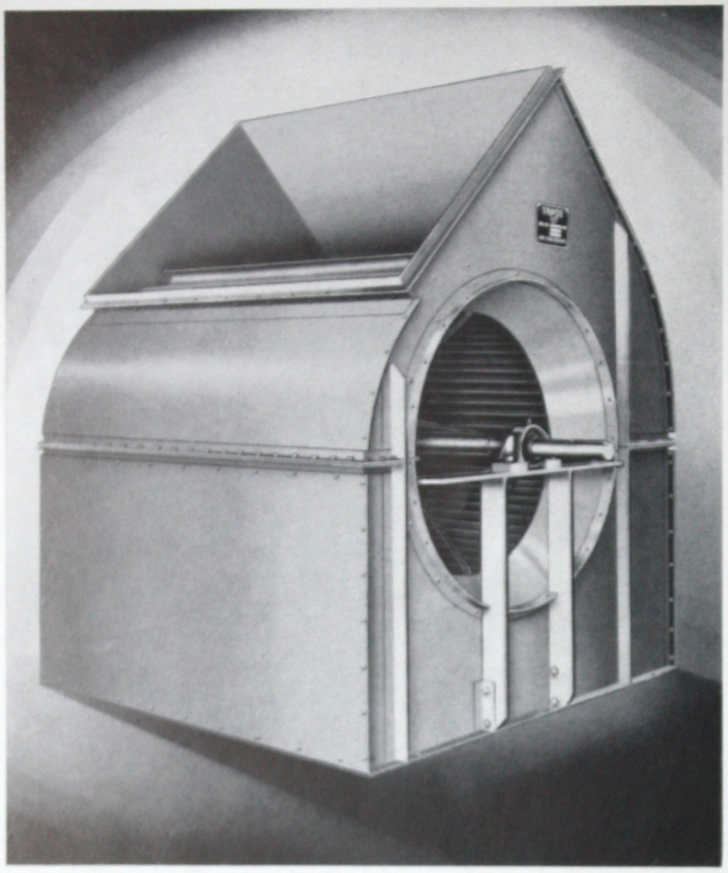

NO. 66

To satisfy demands for large ventilating and air conditioning applications Trane has included a fan having a wheel diameter of 66 inches as a standard size, in both single and double wheel widths.

The fan to the left indicates the construction used on this large fan. Housing is built in two separate sections each of which can be handled as an individual unit. The same bolted seam construction that is used on medium sized units permits complete disassembly of this large fan.

The unit shown has Forward Curved Double Width Wheels. Top Angular Discharge. Drive Arrangement 3.

Large **FC**

FIGURE 5

NO. 66

All Trane Fans are built to comply with standards set by N.A.F.M., the National Association of Fan Manufacturers, and are available in all standard arrangements and directions of discharge. They are tested and rated in accordance with N.A.F.M. codes. Each fan wheel is carefully balanced before assembly. Each fan test-run before shipment.

The fan illustrated on the right is a Single Width Backwardly Inclined Fan. Housing is split into an upper and lower section, with bolt-seam fabrication throughout. Bottom Horizontal Discharge is illustrated. Drive Arrangement 3.

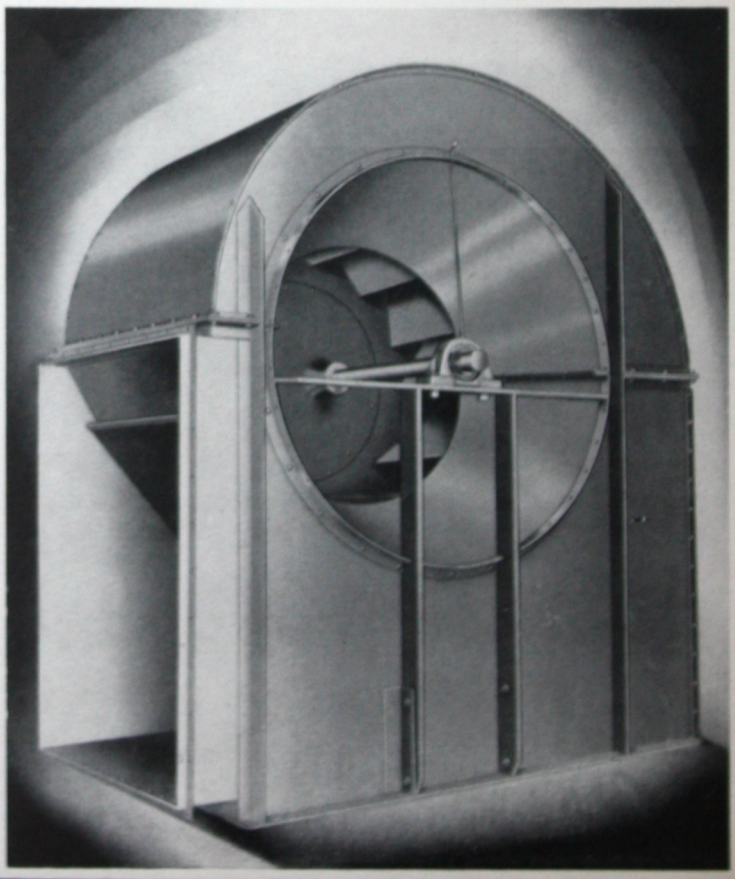

Large **BI**

FIGURE 6

FAN FEATURES

Figures 7 and 8 show large BI Fan with split housing which simplifies handling.

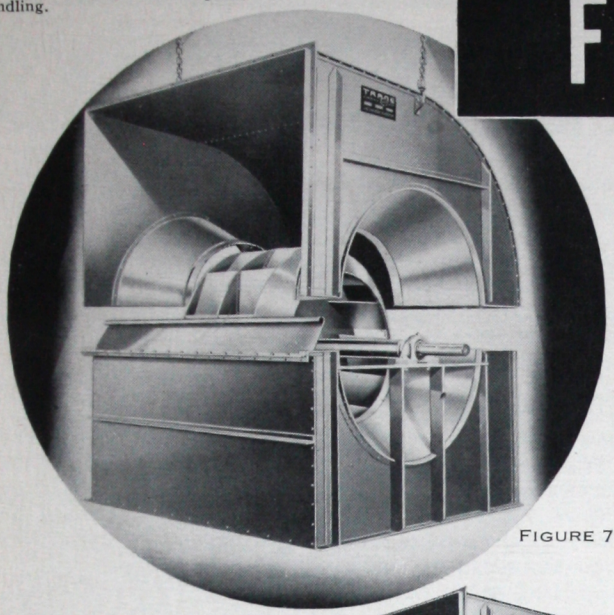

FIGURE 7

FIGURE 8

All Trane Fans may be divided into two general groups according to construction features.

1. Centrifugal Fans—small—Sizes 8 to 30.
2. Centrifugal Fans—large—Sizes 33 to 66.

Size numbers on Centrifugal Fans indicate their wheel diameters expressed in the nearest inch.

SMALL FANS

Fans numbering 8 thru 30 are available in the following types and sizes.

Forward Curved Fan Wheels. Single Width and Double Width with wheel diameters of : 8″, 12″, 15″, 18″, 21″, 24″, 27″ and 30″.

Backwardly Inclined Fan Wheels. Single and Double Width with wheel diameters of: 15″, 18″, 21″, 24″, 27″, and 30″.

Since the Trane Company of Canada, Limited, manufactures both Forward Curved and Backwardly Inclined Fans in an extremely wide range of sizes it is possible to select regular item fans that are in effect "tailor-made" to satisfy a particular application.

Lockseam construction . . . an exclusive Trane fabrication process . . . is utilized on all fans having a wheel diameter of 30″ or less.

The seam, illustrated in Figure 9, is achieved by inserting the fan housing sides into a deep, narrow U formed along the edges of the fan scroll and rigidly crimping scroll to side sheets. The tight metal-to-metal joint thus formed is responsible for the outstanding advantages of fans in this size range.

1. AIR TIGHT HOUSING.
2. ATTRACTIVE APPEARANCE.
3. UNUSUAL STURDINESS.

The lockseam construction is typical of many fabrication extras, provided at no premium in price, that make the Trane Fans outstanding in value.

All fans, regardless of size, are shipped from the factory with the direction of discharge set to conform to requirements of specified applications. However, it is often necessary to alter the discharge direction of smaller fans. This can be done on every fan having a wheel diameter of 30″ or less simply by removing the bolts from the inlet ring, turning the housing to desired direction and reassembling. See Figure 12. Making the change takes but a few minutes simplifying selection and installation of these units.

Fans with wheel diameters of 21″ or less may be set to discharge at increments of 45° from the Top Horizontal position. When wheel diameters are 24″, 27″, or 30″ increments are 22½°.

WHEEL CONSTRUCTION

The fan wheels on these smaller size units are individually checked for weight distribution and alignment with the same exact care used on larger units. Wheel rims are steel with blade openings die cut so that each blade is set at an identical angle to the rim.

On Forward Curved Wheels with diameter of 8″ 48 narrow curved blades are used while on the larger sizes 64 blades are set into the stamped wheel. Tie rods strengthen wheels 24″ and larger.

Backwardly Inclined Wheels are carefully fitted with 12 blades, slanting backwards to the direction of discharge, held securely in place by a special formed rim.

Cast iron hubs are used on even the smallest units since they provide greater strength, durability and wheel rigidity.

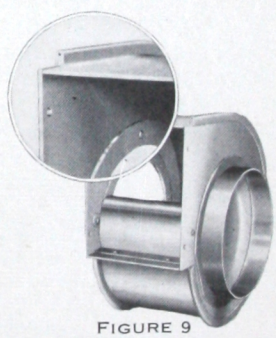

FIGURE 9
Lockseam Housing

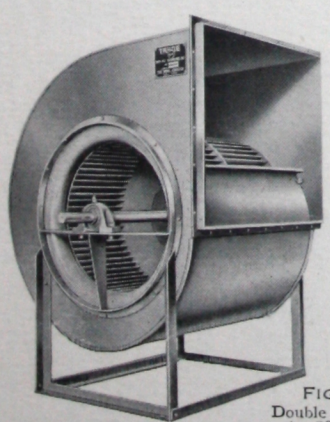

FIGURE 10
Double Width FC Fan size 30 and smaller.

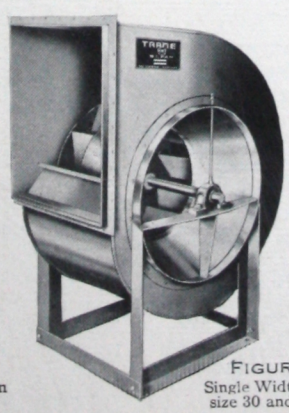

FIGURE 11
Single Width BI Fan size 30 and smaller.

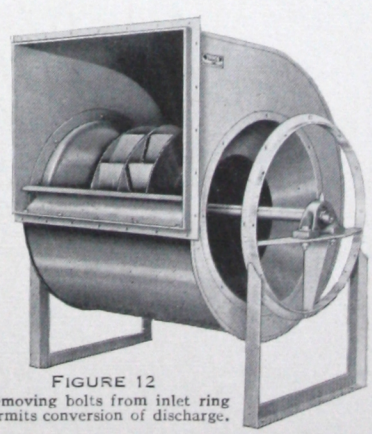

FIGURE 12
Removing bolts from inlet ring permits conversion of discharge.

LARGE FANS

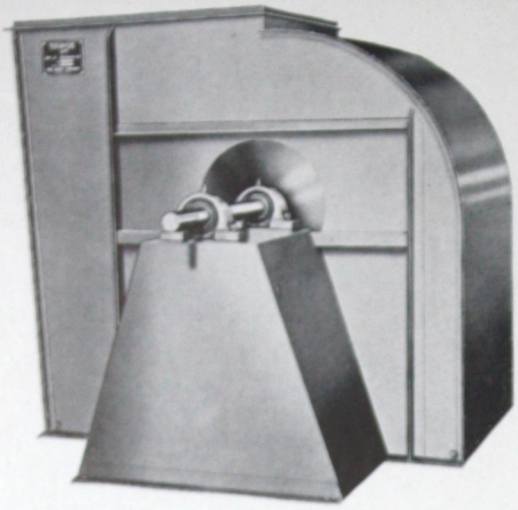

FIGURE 13
No. 49 Up-Blast Fan,
Drive Arrangement 1.

Trane Centrifugal Fans numbering 33 thru 66 are designed for the larger comfort heating, ventilating and air conditioning jobs as well as industrial and process drying and air conditioning. All sizes in this group can be obtained with either FC or BI Wheels of single or double width. Capacities extend to 175,600 CFM.

BOLT SEAM CONSTRUCTION

These fans are constructed with apron and side sheets carried to the floor forming a durable, box-like housing. Extra-wide base angles provide a solid anchorage.

Sides and scroll are bolted to a frame of steel angles. Throughout the entire housing, wherever two steel sheets are in junction this angular steel forms the joint to which the steel side sheets and apron are bolted. This not only strengthens and reinforces the entire housing but also provides a metal seam that prevents air leakage.

In addition, the bolted seam construction permits these fans to be completely disassembled. All the fans in this group have been designed so that this can be accomplished with the utmost ease and rapidity. Especially desirable for on-the-job handling and inspection, this design feature is also of major importance in facilitating shipment for export or wherever shipping space is a major consideration.

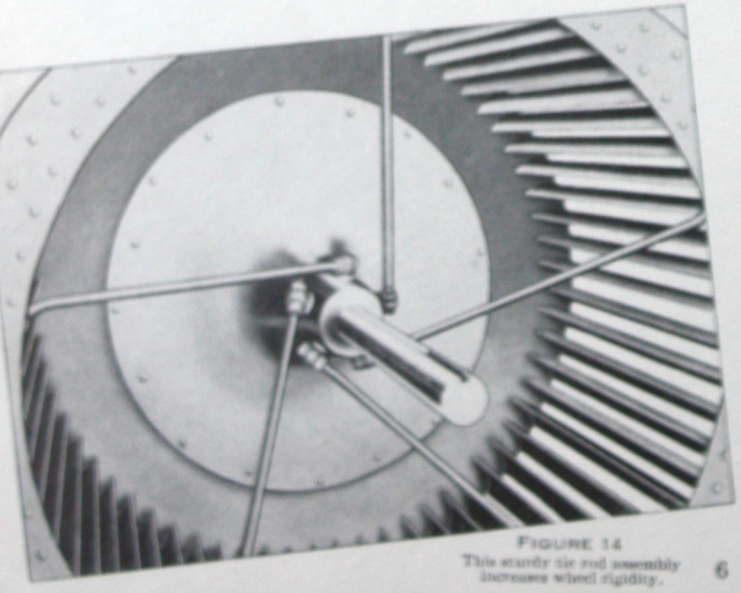

FIGURE 14
This sturdy tie rod assembly increases wheel rigidity.

Figures 15 and 15A show one of these units in two stages of disassembly.

In addition to the boltseam construction used on all fans in this range, the largest—66 is characterized by a split housing. Built in two separate sections, the upper part of the housing can be removed from the lower and handled as an individual unit as shown in Figures 7 and 8 further simplifying shipment, installation and inspection.

DISCHARGE SET

Fans of this size are built specifically to conform to the requirements of certain applications. Since this is true the direction of discharge is set at the factory. *It cannot be altered after assembly*. All of these fans may be obtained in any of the standard drive arrangements and directions of discharge as shown on page 47.

Fans 33″ to 66″ in diameter with Forward Curved Wheels have 64 die formed blades securely riveted to rims and back plates which are die cut so that the individual blades are all set at exactly the same angle. The entire wheel housing is supported by tie rods between wheel rim and hub, increasing wheel rigidity. Figure 14 shows a close-up of tie rod construction.

Backwardly Inclined Wheels have a special formed rim to which are welded 12 large blades which slant backwards to the direction of discharge.

Each wheel is thoroughly checked for alignment and weight distribution before assembly.

The streamlined inlet is designed to admit maximum amount of air to fan interior with a minimum of resistance and back current. Back plate and hub are aerodynamically correct for diverting direction of air without setting up crosseddies.

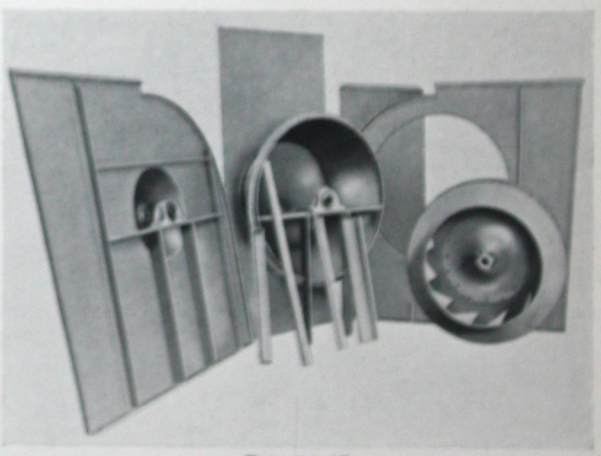

FIGURE 15

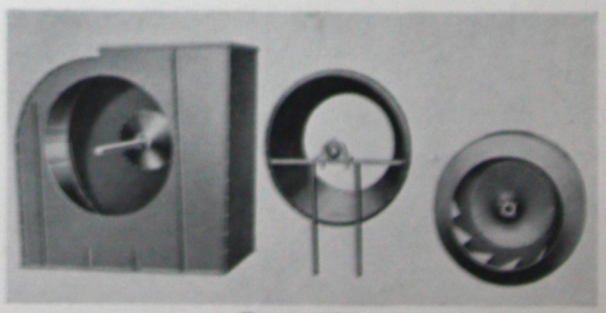

FIGURE 15A

BEARINGS

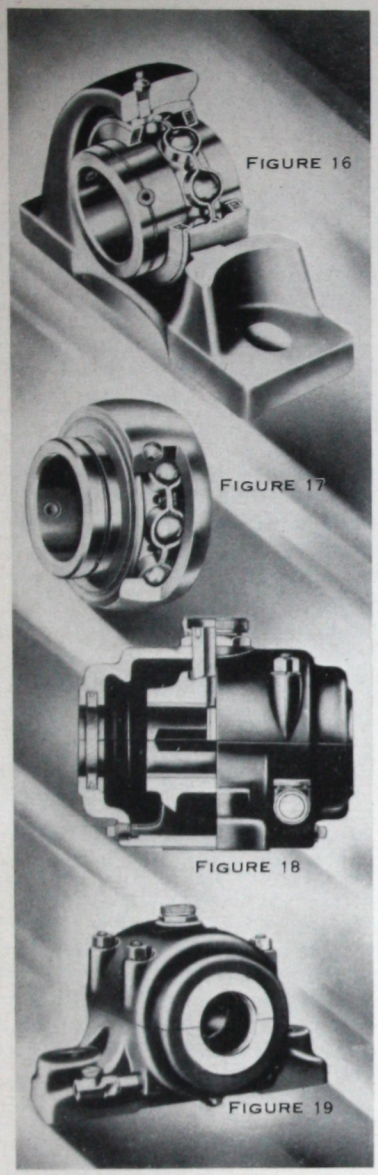

FIGURE 16

FIGURE 17

FIGURE 18

FIGURE 19

BALL BEARINGS

Precision ball bearings of the self-aligning grease packed pillow block type are standard equipment on Trane Centrifugal Fans. These bearings are pre-lubricated and feature a permanent centrifugal labyrinth seal which keeps out dirt and retains lubricant.

The high carbon electric furnace steel used on the balls and bearing races is of the highest quality. It is subjected to rigorous metallurgical testing and examination before being machined into the bearing parts. After machining, the parts are hardened in a steel treating plant. Long life and trouble-free operation result.

The design features of the bearing itself are the result of vast engineering experience in the field of load carrying.

1. The bearing assembly has deep grooved ball paths.

2. The race contour corresponds to ball contour to the greatest extent consistent with good bearing design.

3. The balls are fitted into their raceway paths with no axial play.

4. The balls are of maximum size and number allowable with annular type ball bearings.

5. The ball retainer maintains its rotating position without riding the contour of the balls.

6. The ball pocket walls are perpendicular to seal in lubricant.

These features contribute to increased load capacity and bearing life, reduce wear to a minimum and assure maximum operating efficiency.

Bearings are pre-lubricated with a light viscosity, low torque grease that has a high temperature—above 250°—melting point and a low cold test of – 30°. It will withstand speeds far in excess of those ordinarily encountered in fan operation.

To assure efficient fan operation, periodic relubrication of all fan bearings should be a regular item on the maintenance schedule. Fan speed and atmospheric temperature and condition are factors determining the desired frequence of relubrication. Bearings should be lubricated when the fans are in operation. Only a small amount of grease is needed since the sealed bearing chambers should be filled to only $\frac{1}{3}$ of their capacity.

Alemite hydraulic fittings are furnished as standard. The patented locking pin feature not only provides for bearing lubrication but also prevents rotation of the bearing outer race ring and resulting wear in the housing. In addition it permits several degrees of fan shaft misalignment in any direction. Each end of the locking pin has a V groove to permit free passage of grease into the sealed chamber.

Precision type pillow blocks of the style illustrated in Figure 16 are used on all fans with Drive Arrangements 1, 3, 5, 6, 7, and 8. On Drive Arrangement 2 Fans, precision type pillow blocks of the style illustrated in Figure 23 are ordinarily used. This bearing consists essentially of two bearings similar to that illustrated in Figure 17 which are incorporated into a single housing. The bearings themselves have identical design, fabrication and mechanical features. However, the "double" pillow block is used only on Arrangement 2 Fans. These are belt driven units with pulley and wheel overhung. The double bearing is mounted on a bracket which is securely welded to the side of the fan housing.

OIL RING SLEEVE BEARINGS

Oil ring lubricated sleeve bearings are available at slight additional cost on all Trane Fans having a wheel diameter of 18″ or more. These bearings are especially designed for fan duty. They are of the self-aligning, precision built, babbitted bearing type.

The design of the oil seal prevents leakage of oil and entrance of foreign material into the bearing. This is of particular importance because of the high temperature and velocity often encountered in fan applications.

Dependable lubrication is insured by the use of T sectional oil rings. Bearings in sizes from $1\frac{7}{16}$″ to $3\frac{7}{16}$″ inclusive have one ring while the larger bearings have two.

Oil ring lubricated sleeve bearings of the type illustrated in Figures 18 and 19 are designed for installation on Trane Fans with Drive Arrangement 1, 3, 6, 7, and 8.

Figure 22 illustrates the type of oil ring lubricated sleeve bearing used on Trane Fans having Drive Arrangement 2 and 5.

GRAPHITE INSERT SLEEVE BEARINGS

Graphite insert sleeve bearings—Figure 21—are also available on Fan No. 15 and smaller when sleeve, rather than ball, bearings are desired. These bearings are manufactured from high grade cast phosphor bronze. The base of the bushing contains graphite and graphite feed plugs connect bushing and reservoir so that the required lubrication is distributed to all points of the bearing as needed.

The bearings are rigidly mounted upon welded steel supports. They will operate in the field without the necessity of frequent lubrication or attention.

Heat responsive, these bearings draw larger amounts of lubricant from the reservoir if it is required to reduce high temperatures resulting from overloading or foreign matter, thus protecting both shaft and bearing.

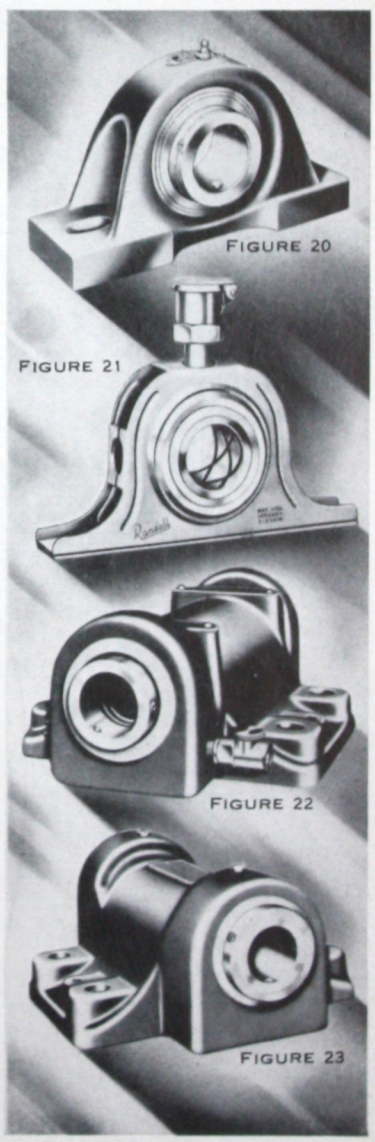

FIGURE 20

FIGURE 21

FIGURE 22

FIGURE 23

AUXILIARY EQUIPMENT

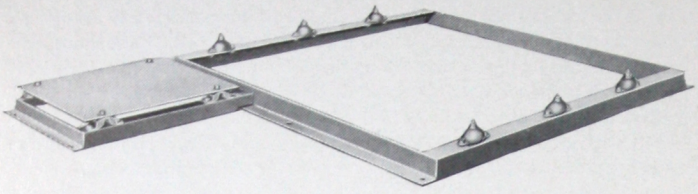

FIGURE 24

On many fan installations certain conditions exist that make it desirable to give special treatment to standard fans. Trane engineers and laboratory technicians have analyzed the various conditions that may be encountered and have worked out special features and designed a wide range of auxiliary equipment in anticipation of these conditions.

It is well to contact Trane field engineers whenever extraordinary conditions indicate the need for special treatment since this company manufactures items to help solve practically any problems encountered in air handling for heating, ventilating and air conditioning purposes. All of this equipment is designed for use with Trane Fans and the utmost in efficient operation is assured.

TRANE ISOLATING FAN BASES

Whenever the ultimate in smooth, quiet fan operation is required, Trane Isolating Fan Bases should be installed. When these bases are used, fans and motors are actually held in suspension from building floor and foundations. Any vibration of motor and fan cannot be transmitted through the building. In addition, the heavy rubber fan mountings deaden any noises.

The bases consist of an integral heavy welded steel angle sub-base and rubber-in-shear isolators properly located to isolate fan and motors from the foundation. The rubber-in-shear is considerably more effective than straight compression since it multiplies the isolating capacity of the rubber.

Bases with cork isolators are also available.

For small units or other applications where complete sub-base is not required, individual isolators can be supplied.

VOLUME CONTROLS

On some installations it is necessary that the air quantity delivered by the fan be varied from season to season or even from day to day. Whenever this condition is encountered, the fan should be selected to deliver the maximum volume required. Then the actual volume that is desired can be obtained by reducing the air volume from this maximum. The reduction can be accomplished in any of three different ways:

1. The Outlet Damper Method.
2. The Variable Speed Method.
3. The Radial Vane Inlet Control Method.

Since each of these methods has certain advantages, Trane has available the equipment required for all three.

OUTLET DAMPERS

Dampers installed in the discharge duct provide a simple, low cost and effective means of controlling air volume and reducing power consumption. They are sturdily constructed, easy to install, positive in operation and they may be used with the less expensive standard speed motors.

All dampers for this duty are designed with counteracting blades to provide a reduction in free area without deflecting the air stream.

These dampers are available for use with all Trane Fans, but are more effective on FC than BI. They are especially recommended for smaller sized fans.

The Variable Speed Method, and, to a lesser degree, the Inlet Control Method will reduce power consumption somewhat more than Outlet Dampers. However, the lower first cost of Outlet Dampers will in many cases substantially outweigh the savings in power consumption even over extended periods of time.

VARIABLE SPEED

Several different methods of controlling fan speed are available. If only two speeds are required, a two-speed motor will probably be satisfactory. Then, too, there are variable speed sheaves which permit up to a 20% change from normal speed.

If the fan will be required to operate at one speed during the summer months and another during the winter, it may be more satisfactory to have two different drives. Any of these devices may be used with inlet controls or outlet dampers.

Variable speed 3-phase motors are sometimes used, but both motors and controllers are expensive.

Practically speaking each installation involving varying fan speeds has certain requirements or characteristics which make it unique. The information presented here is intended merely to outline the equipment which Trane has available for this requirement. It is suggested that Trane field engineers be consulted whenever variable speed fan operation is desired.

RADIAL VANE INLET CONTROL

Trane FC and BI fans in sizes 24 and larger can be furnished with adjustable inlet controls that are either automatically or manually operated.

On BI Fans vanes are installed inside of the bearing in the inlet cone. On FC Fans they are installed in a cylinder mounted outside of the fan housing.

When selecting a fan on which inlet vanes are to be used, it is necessary to increase the static pressure by the resistance of the wide open vanes. For outlet velocities:

Up to 1800′ min.	Add 1/16″
1800′ to 2600′ min.	Add 1/8″
Over 2600′ min.	Add 1/4″

BELT GUARD

Trane belt guards are designed to give complete protection from the moving parts of the drive and are arranged so that installation is extremely simple.

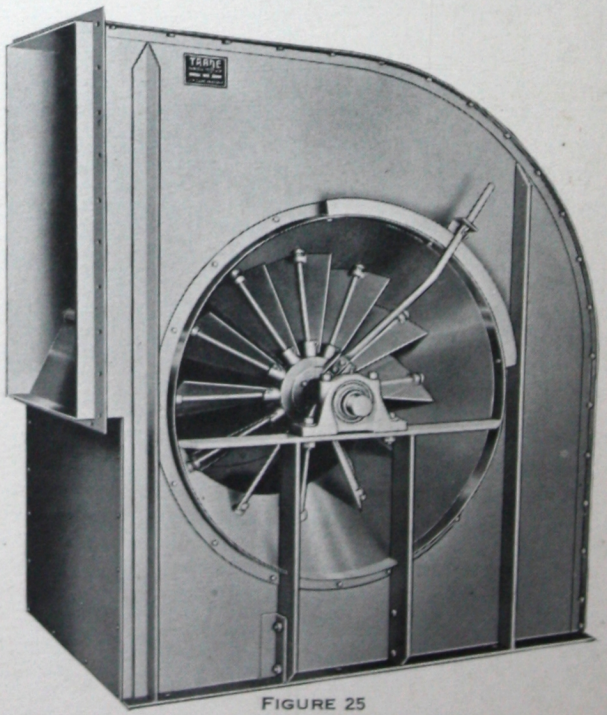

FIGURE 25

FORWARD CURVED
FAN WHEEL CHARACTERISTICS

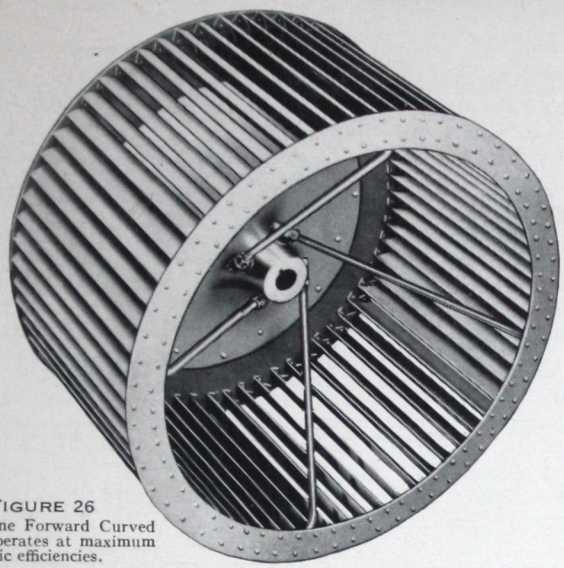

FIGURE 26
The Trane Forward Curved Wheel operates at maximum volumetric efficiencies.

DESIGN

The Trane Forward Curved Multi-blade Fan Wheel is distinguished for its high pressure producing and high air volume characteristics.

In this connection it should be remembered that in any centrifugal fan two forces are responsible for the air movement. One of these comes from the forward motion of the wheel. The second force results from the blades themselves and their design. Since these blades are curved forward they impart a forward motion to the air.

Since the blades and the wheel combine in moving the air forward it leaves the fan outlet at a higher forward velocity than would otherwise be possible. Due to this higher velocity, FC Fans:

1. Have highest volumetric efficiency ratings. FC Fans are more compact, for any given air delivery and static pressure they occupy less space.
2. Have highest pressure effectiveness. The design of the forward curved blades provides satisfaction of any pressure requirement at the lowest possible tip speed. Generally speaking FC Fans operate at a lower noise level.
3. Have lowest horse power requirements. The power consumed over a period of time is a governing factor in fan selection outweighing the initial cost of most cases.

Forward Curved Fan Wheels do not have a self-limiting non-overloading power characteristic but, with the exception of extreme cases, the advantages of this characteristic are somewhat over-rated.

Reference to basic fan laws shows that when a fan is operated on a given system the pressures vary directly as the square of the CFM. Therefore it becomes apparent that the air delivery system to which any fan is connected limits the amount that horse power can increase. Actual installations where static pressure estimates have been more than 30% too high have shown horse power increases of only 10%. Since on practically all installations motors are somewhat oversized, this 10% increase is not of major importance.

CURVE CHARACTERISTICS

The Curves on Figure 28 show the operating characteristics of Trane FC Fans. It will be noted that the high point of the mechanical efficiency curve occurs very near the high points of total and static pressure curves. It will also be noted that the top of the mechanical efficiency curve is comparatively level and slants gradually off to the free delivery point. All fans should be selected to fall to the right of the high point on the static pressure curve but as close to the high point as possible. The curves show that the area to the right of the high point of the static pressure curve coincides with the highest area in the mechanical efficiency curve. Therefore a fan selected to satisfy static pressure requirements will operate at or vary near to peak mechanical efficiency.

WHEEL CONSTRUCTION

Trane FC Fan Wheels have sixty-four narrow curved blades, except the No. 8 which has forty-eight blades. The blades are die-stamped steel constructed so that the curve of each is uniform and exact. The rims and back plates are stamped steel with the openings for the blades die cut. Every blade is set into the wheel at exactly the same angle.

The hub has been designed in accordance with the strictest aerodynamic laws. It is correctly streamlined and wind-tunnel tested with the result that its curvature aids in changing the direction of the incoming air from axial to radial with the least possible pressure loss.

Due to the narrow rim, the shallow blades and the streamlined hub, the inlet opening is almost as large as the diameter of the wheel. Every Trane Wheel is carefully balanced and checked for weight distribution and alignment before it is assembled in the casing.

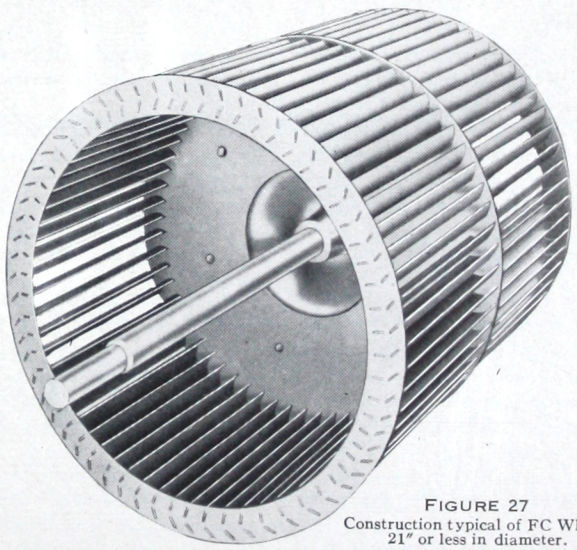

FIGURE 27
Construction typical of FC Wheels 21" or less in diameter.

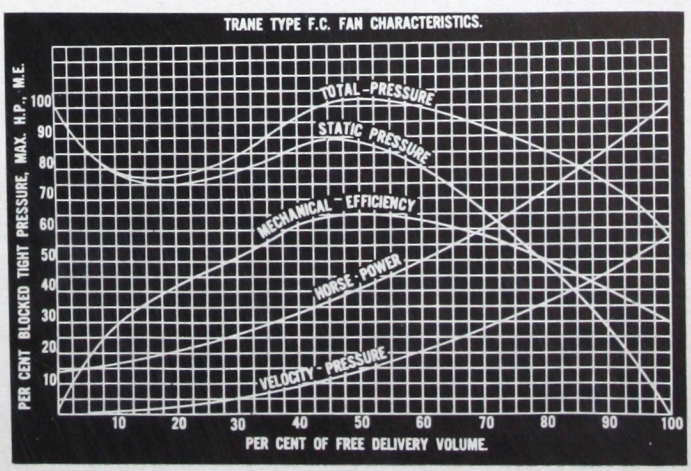

FIGURE 28

BACKWARDLY INCLINED

FAN WHEEL CHARACTERISTICS

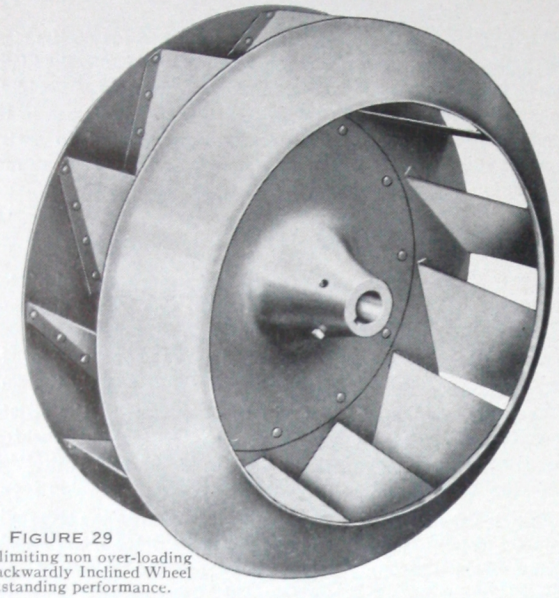

FIGURE 29
The self limiting non over-loading Trane Backwardly Inclined Wheel gives outstanding performance.

DESIGN

The steep pressure curve; non-overloading power characteristics and relatively high peripheral speed are distinguishing features of Trane Backwardly Inclined Fan Wheels.

As indicated in Figure 31 the pressure curves for Backwardly Inclined Fans begin to drop at low capacities. They fall rapidly after reaching 50% of free delivery volume. The steep portions of these curves indicate that fans of this type will operate at almost constant capacity under changing pressures.

FOR DIRECT DRIVE

Trane BI Fans operate at tip speeds approximately 175% higher than those found in Forward Curved Fans. Since this is true, BI Fans are better suited for direct connection to standard motors which operate at speeds that are too high for other types of fans. Standard speed motors present advantages of availability and lower cost that are too important to be ignored in the consideration of direct driven ventilating units.

The horse power curve in Figure 31 indicates that Trane Backwardly Inclined Fans have truly self limiting, non-overloading power characteristics. The power consumed rises to a maximum point near the 80% of free delivery point and from there on declines while the air volume increases. This makes these fans the obvious selections wherever wide fluctuations in air volume are expected to occur during normal operation of the fan. On systems where such fluctuations are to be regulated by means of dampers or by-passes, the Backwardly Inclined Fans are particularly desirable.

FOR PROCESS WORK

Backwardly Inclined Fans are frequently desirable for process heating and drying applications, principally because the designing of equipment for these purposes is apt to depend somewhat on a trial and error method. After fans and coils are installed it is often discovered that by changing air temperatures and volumes, more effective processing will result. Much experimenting is often necessary before the best possible combination of heating coils and air volume is discovered. Here the advantages of fast falling pressure curves and self-limiting, non-overloading power characteristics of BI Fans become apparent. Because of these characteristics, BI Units will operate at a nearly constant capacity regardless of slight changes in pressure and will not overload their motors.

A Backwardly Inclined Fan to have the same capacity as a Forward Curved Unit will usually have to be one size larger than the FC.

MECHANICAL SPECIFICATIONS

Backwardly Inclined Wheels have twelve relatively narrow blades with a special, accurately formed rim. The blades slant backward to the direction of discharge.

The back plate and hub assembly conforms in every detail to aerodynamic laws as they apply to fans and air handling. It is correctly streamlined in design so that it diverts incoming air to the direction of discharge with the least possible resistance to the air flow and the absolute minimum of eddy currents. Quiet, stabilized fan operation is assured.

BALANCE

All BI Wheels are carefully balanced before assembly. Weight distribution is checked with extreme care. The die-formed blades are accurately located and spaced. All of these design features contribute to smooth operation at the highest speeds that may be encountered. Each completed unit is test-run before shipment.

For complete information on capacities, see pages 32 to 45. Roughing-in dimensions are on pages 48 to 61.

FIGURE 30
Fans with Double Width Wheels are best for installation where vertical space is at a minimum.

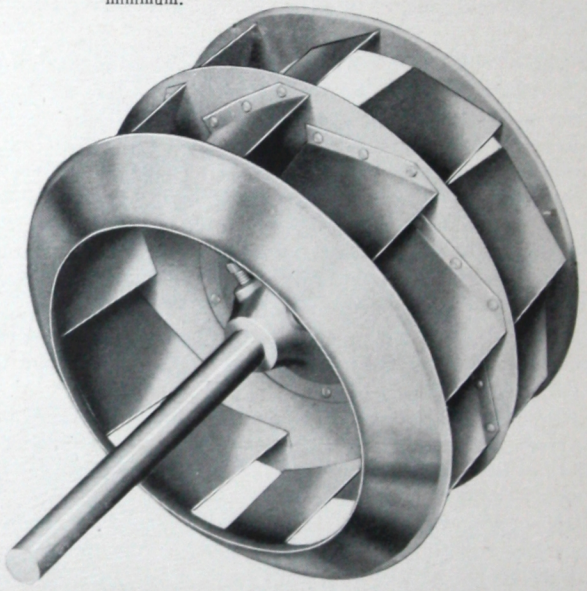

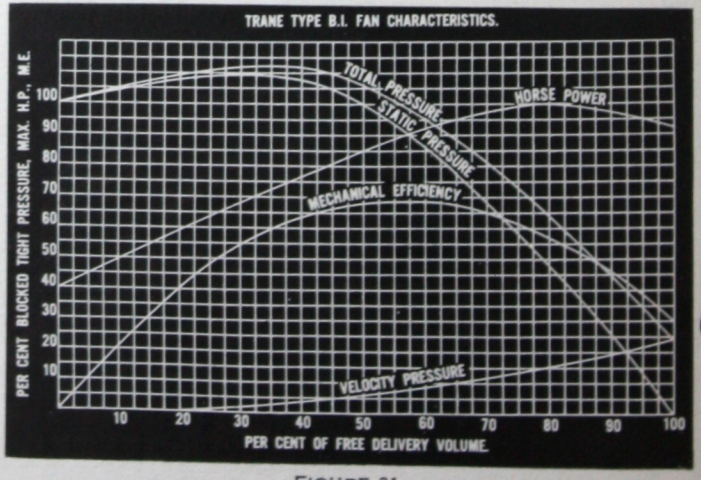

FIGURE 31

SPECIAL APPLICATION FAN

MULTIPLE FANS

For those installations where headroom is at a minimum, Trane Multiple Centrifugal Fan units provide the economical answer to ventilation problems. Figure 32 illustrates a twin fan unit. Similar equipment with three or even four fans on each unit can be obtained. Only double width, double inlet fans are used on units of this type. Fan diameters may range up to 30″.

Regardless of whether two, three or four fans are used on a single unit, they have one common base and a single shaft. They are all driven by the same motor and drive assembly. The unit illustrated is designed for installation in a plenum chamber; however, Trane will supply multiple fan units enclosed in their own sheet metal chambers if desired.

Trane's experience in the manufacture of fans for special applications extends over a period of many years and includes the design and fabrication of a vast variety of units. Some of them have been a part of exacting process applications. Others have helped men live and work in spite of extreme temperature and humidity conditions. They have seen service in the sub-stratosphere and supplied life sustaining ventilation to submariners.

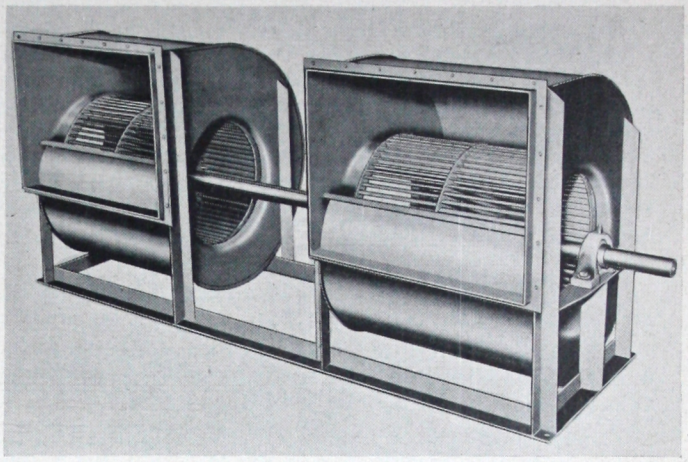

FIGURE 32
Multiple Fans deliver large quantities of air and require a minimum amount of headroom.

FAN SELECTION

WHAT TYPE WHEEL SHOULD BE USED

When selecting a fan, one must first determine if a Forward Curved or Backwardly Inclined Fan is desired.

Either the Forward Curved or Backwardly Inclined Fan will satisfy all heating, air conditioning and ventilating requirements, but neither is an "all purpose" fan. While some applications may be satisfied by a fan of either type, each has certain features which make it most desirable for any single installation. Since Trane manufactures both kinds it can present, without bias, comparisons of both types which may be of assistance in determining which Fan is desired.

For comparable performance it is usually necessary to select a BI Fan that is one size larger than the FC.

The FC will generally operate more quietly.

BI Fans have a truly self-limiting, non-overloading power characteristic. FC Fans do not.

It is of prime importance that the discharge duct from a FC Fan be the same size as the fan outlet and that the duct extend at least 1½ times the diameter of the fan before any change in size or direction is made. This is not so important a consideration when BI Fans are used.

BI Fans, especially where larger sized units are required, are preferred for direct connection to motors.

FC Fans, because they are lower in initial cost, quieter in operation, and occupy less space, are more generally used for the ordinary air conditioning and ventilating installation.

WHAT SIZE WHEEL SHOULD BE USED

After determining if a FC or BI Fan is to be used, the main points to be considered are:

1. The volume of air that must be handled.
2. The static pressure that will be encountered.
3. Whether single width or double width fans are to be used.
4. The noise level that can be tolerated.

These points are not necessarily in the order of their importance and other considerations may influence selection. The above items are, however, basic in the consideration of all ventilating units. Because they are vital to proper selection, they were all taken into consideration in the preparation of Trane capacity tables. While they are spoken of as "capacity tables", these tables are actually considerably more than that, for their proper usage makes the selection of exactly the right fan a comparatively simple matter.

Separate Tables

A separate table is provided for: each single width FC fan numbering from 12 through 66, pages 15 to 22; each double width FC fan numbering from 8 through 66, pages 23 to 31, each single width BI fan numbering 15 through 66, pages 32 to 38, and each double width BI fan numbering 15 through 66, pages 39 to 45.

These tables contain:

1. The volume of air in cubic feet per minute (CFM).
2. The outlet velocity.
3. A wide range of static pressures.
4. The tip speed.
5. The revolutions per minute.
6. The brake horse power.

The value of Trane fan tables as a guide to good fan selection lies in the fact that they do not contain any information on tip speeds, RPM or horse power where the selection of that size fan to satisfy the existing conditions would result in unstable, inefficient or noisy operation. This accounts for the blank spaces found at the top or bottom of some of the static pressure columns. To be assured of most efficient fan operation it is well to make selections which lie near but not at the top of this static pressure column.

The VOLUME OF AIR that is required must be calculated before the fan can be selected.

The maximum OUTLET VELOCITY is generally determined by the allowable noise level. The higher the outlet velocity, the higher the noise level is apt to be.

Table 1 shows the approximate outlet velocities and tip speed for maximum efficiency of FC Fans. Table 2 contains the same information for BI Fans.

The STATIC PRESSURE at which the system will operate can be determined. In this connection it should be noted that a fan operating against a high static pressure will produce more noise than the same fan operating against a lower static pressure. For this reason it is well to design a system with the lowest possible static pressure whenever noise level is of paramount importance.

These three factors—Volume of Air, Outlet Velocity and Static Pressure—of fan selection are the known or ascertainable considerations in selecting the proper size of fan. Tip speed, revolutions per minute and brake horse power will be governed by the diameter of wheel that is finally decided upon.

TABLE 1

RECOMMENDED TIP SPEEDS FC FANS

FRICTION OR STATIC PRESSURE	TIP SPEED NECESSARY	OUTLET VELOCITY
⅛"	1100 – 1200	700 – 1000
¼"	1400 – 1600	800 – 1200
½"	2000 – 2200	1000 – 1400
¾"	2400 – 2600	1200 – 1600
1"	2800 – 3000	1400 – 1800
1¼"	3100 – 3300	1600 – 2000
1½"	3400 – 3600	1700 – 2200

When the volume, outlet velocity and static pressure are known, the diameter of the wheel that will be required can easily be determined.

Example of Fan Selection

A forward curved single width fan is required that will move 12,000 CFM of air against ⅝" of static at an outlet velocity not to exceed 2,000 feet per minute.

Reference to the fan tables starting on page 15 shows that a No. 33 Fan (Table 11) is the smallest unit that will handle 12,000 CFM against ⅝" of static. However, the outlet velocity will be over 2,000 feet so the No. 33 is ruled out and the next larger size is considered.

Table 12 indicates that a No. 36 Fan will handle 12,019 CFM against ⅝" of static and the outlet velocity is only 1,700. So the 36" Fan is a definite possibility.

Table 13 shows that a No. 40 Fan will move 12,404 CFM against ⅝" of static at an outlet velocity of 1,400 ft. So it, too, will be considered.

However, there is still another possibility. According to Table 14 a No. 44 Fan will move 12,960 CFM against the determined static at only 1,200 outlet velocity.

Which fan, then, should be used?

TABLE 2

RECOMMENDED TIP SPEEDS BI FANS

FRICTION OR STATIC PRESSURE	OUTLET VELOCITY	TIP SPEED
¼"	600 – 900	2400 – 3200
½"	700 – 1000	3200 – 3900
¾"	800 – 1100	3900 – 4500
1"	900 – 1200	4500 – 5000
1¼"	1000 – 1300	5000 – 5500
1½"	1100 – 1400	5500 – 6000

Preliminary Possibilities

In the first place, errors may have been made in calculating the static pressure. So this should be considered. If the static pressure which was estimated at ⅝" proves to be ¾", the following conditions exist:

The No. 36 will handle 12,019 CFM at ¾" static pressure.

The No. 40 will handle 12,404 at ¾" static pressure.

The No. 44 will handle 12,960 at ¾" static pressure. But the figure of 12,960 is right at the top of the column. This, as explained below, is not a good selection. It indicates that the selection of the 44 where only 12,000 CFM are to be moved against ¾" static pressure will be the equivalent of a selection to the left, instead of to the right, of the high point in the static pressure curve Figure 28. Such a selection would very probably result in unstable, noisy operation. And since the static pressure might very easily be underestimated by ⅛", the No. 44 would not be a good selection.

This leaves only No. 36 and 40 Fans. Both of them satisfy the CFM outlet velocity, and static pressure requirements. Both will operate at ½", ⅝" or ¾" static and still give satisfactory results.

What will now determine the final selection?

Final Choice

If initial cost and the amount of space required are primarily important, the No. 36 should be used. However, it will consume more power than the No. 40.

If quiet operation and maximum efficiency and economical performance are the most important factors, the No. 40 should be selected.

SELECTING DOUBLE WIDTH FANS

In some cases the vertical space available for a fan installation is limited but there is plenty of horizontal floor space available. When this is true the selection of a double width fan is indicated.

The same general procedure as shown for single width fans will result in correct size selection.

However, when double width double inlet fans are used, both inlets must have equally free access to air. If one inlet is obstructed more than the other, improper operation is certain to result since one-half the fan will deliver more air than the other half.

In this connection it should be constantly remembered that proper installation and location of fans are as important as the selection of the correct sizes. All Trane Fans will operate according to their characteristic curves if they are properly selected, installed and operated. The entire service of the Trane engineering staff is available for consultation and advice on any of the phases of fan installation.

SELECTION OF FANS AT OTHER THAN STANDARD DENSITY

Fan tables are based on air of standard density (Temperature 70° F.; barometric pressure, 29.92″ hg.; density .075 pounds per cubic foot).

When a fan is required to handle air at conditions other than standard, a correction must be made in the static pressure before using the table. The horse power from the table must then be corrected. (See Basic Fan Laws 4, 5 and 6, page 65.)

A fan is essentially a constant volume machine and at a given speed on a given system the volume in CFM will not change regardless of the air density. The static pressure, however, changes directly with the density.

The chart in Figure 33 gives air density ratios at conditions other than standard.

Care must be exercised to see that the static pressure for the system is correctly calculated for the specified conditions. All friction tables and charts on ducts, filters, coils, etc., are based on standard air. (For actual friction at conditions other than standard, multiply the figure calculated from tables, using the actual air volume, by the factor from Figure 33.)

Knowing the air volume and actual friction for the specified condition, first divide the friction by the factor from Figure 33. Using the corrected friction and the specified volume, select a fan from the Fan Tables. The outlet velocity, tip speed and Rpm are correct as taken from the tables.

To determine the correct BHP multiply the BHP from the table by the correction factor.

Example

Given—Select an FC DWDI fan to deliver 6,000 CFM, measured at a temperature of 125° F. and a barometric pressure of 27.4″ hg, against a static pressure of 1.0″. Outlet velocity not to exceed 2,000 feet per minute.

Solution—

$$\frac{\text{1″ (Specified Static)}}{\text{.832 (Correction Factor)}} = 1.2''$$

Correction factor - .832 (Figure 33).

$$\frac{\text{Air Volume - 6,000}}{\text{Max. Outlet Velocity 2,000}} = 3 \text{ square feet minimum}$$

fan outlet area.

Reference to fan tables will show that an 18 FC DWDI fan is the smallest that can be selected.

CFM	6000
Static	1.2
OV	1925
RPM	663
Tip Speed	3120
Brake Horse power	2.11

The RPM from the table is correct, but the Brake horse power must be adjusted.

Correct Bhp = 2.11 × factor (.832) = 1.76.

If the fan will, at times, be required to handle denser air, a motor sufficiently large to handle the requirements at the greatest density should be selected.

FIGURE 33

AIR DENSITY RATIOS

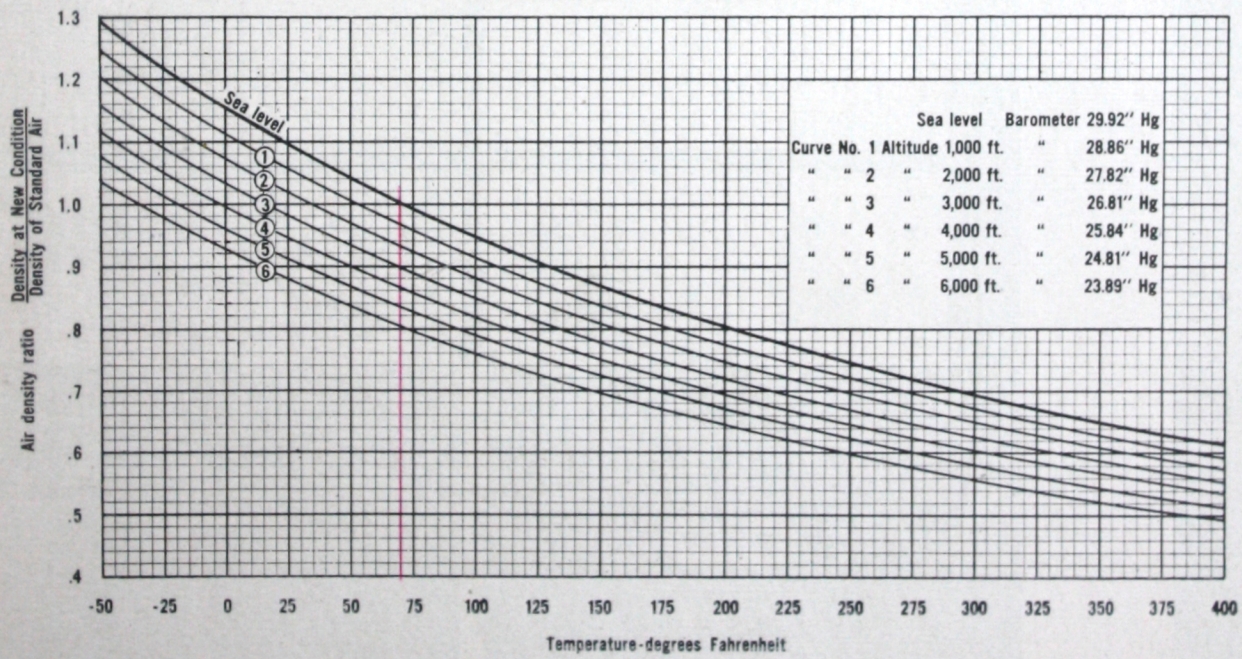

TRANE CENTRIFUGAL FANS

TYPE		SIZE RANGE WHEEL DIAM.	SIZE RANGE C F M	ARRANGEMENTS	DISCHARGE	CONSTRUCTION	APPLICATION
FC Forward Curved	SWSI 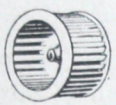	8" thru 30"	255 - 19,600	1*-2-3-4	CONVERTIBLE	LOCKSEAM	For heating, air conditioning and ventilating. For either comfort or process. For delivering greatest air volumes. For meeting minimum space requirements. For most efficient operation. For operation at lowest tip speeds. For satisfaction of low noise level requirements.
		33" thru 60"	4,752 - 78,540	1-3	FIXED	BOLTED SEAM Complete Disassembly	
		66"	19,000 - 95,000	1-3	FIXED	BOLTED SEAM Complete Disassembly Split Housing	
	DWDI 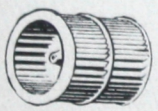	8" thru 30"	510 - 37,000	3	CONVERTIBLE	LOCKSEAM	
		33" thru 60"	8,800 - 147,800	3	FIXED	BOLTED SEAM Complete Disassembly	
		66"	35,120 - 175,600	3	FIXED	BOLTED SEAM Complete Disassembly Split Housing	
BI Backwardly Inclined	SWSI 	15" thru 30"	738 - 11,760	1*-2-3-4	CONVERTIBLE	LOCKSEAM	For heating, air conditioning and ventilating. For either comfort or process. For direct connection to motors. For installations where static pressures are apt to vary widely. For systems requiring non-overloading self-limiting horse power characteristics.
		33" thru 60"	3,564 - 46,922	1-3	FIXED	BOLTED SEAM Complete Disassembly	
		66"	14,256 - 57,024	1-3	FIXED	BOLTED SEAM Complete Disassembly Split Housing	
	DWDI 	15" thru 30"	1,309 - 22,200	3	CONVERTIBLE	LOCKSEAM	
		33" thru 60"	6,600 - 88,680	3	FIXED	BOLTED SEAM Complete Disassembly	
		66"	26,340 - 105,360	3	FIXED	BOLTED SEAM Complete Disassembly Split Housing	

*Available only in sizes 18 and larger.

*Available only in sizes 18 and larger.

TABLE 4

No. 12 SINGLE WIDTH SINGLE INLET FAN — TYPE FC

CIRCUM. = 3.14′ WHEEL DIA. 12″ OUTLET AREA = 0.785 SQ. FT.

STATIC PRESSURE →		1/8″			1/4″			3/8″			1/2″			5/8″		
CFM	OUTLET VEL	Tip Speed	RPM	HP	Tip Speed	RPM	HP	Tip Speed	RPM	HP	Tip Speed	RPM	HP	Tip Speed	RPM	HP
628	800	1115	355	.03	1430	456	05	1710	544	.07						
707	900	1162	370	04	1470	468	06	1730	551	08	1975	629	.10			
785	1000	1235	394	05	1510	481	07	1770	564	09	1990	634	.11	2210	704	.13
863	1100	1300	415	06	1560	497	08	1800	573	10	2015	642	.12	2225	708	15
942	1200	1380	440	07	1615	514	09	1845	588	11	2050	653	.14	2240	714	17
1021	1300	1460	465	08	1675	534	11	1895	604	13	2090	666	.16	2270	723	19
1100	1400	1650	525	10	1740	554	12	1945	620	15	2130	678	.18	2310	736	.21
1178	1500				1810	576	14	1995	635	18	2180	694	20	2350	748	24
1256	1600				1885	600	17	2050	653	20	2230	710	.23	2400	764	.27
1335	1700				1960	624	19	2120	675	.23	2275	724	.26	2450	780	30
1414	1800				2035	648	.22	2170	691	.26	2325	740	.29	2500	796	33
1492	1900							2240	714	29	2400	764	.33	2545	810	.37
1570	2000							2330	742	.33	2470	786	37	2590	824	40
1727	2200										2600	828	.45	2760	879	.49
1884	2400										2760	879	.55	2950	940	.60
STATIC PRESSURE →		3/4″			7/8″			1″			1 1/4″			1 1/2″		
942	1200	2430	774	20	2610	831	22									
1021	1300	2450	780	22	2630	838	25	2800	892	29						
1100	1400	2485	792	24	2650	844	28	2810	894	31	3110	990	38			
1178	1500	2525	804	27	2690	856	31	2830	900	.34	3130	996	41			
1256	1600	2575	820	.30	2725	868	.33	2860	910	.37	3150	1003	.44	3420	1089	.53
1335	1700	2610	831	.33	2765	880	36	2900	924	40	3175	1011	.47	3440	1095	56
1414	1800	2660	847	36	2805	893	40	2940	936	44	3200	1019	.51	3460	1102	59
1492	1900	2705	861	40	2830	901	44	2980	949	48	3240	1032	56	3500	1114	.64
1570	2000	2750	876	44	2860	910	48	3020	961	52	3290	1048	62	3540	1126	69
1727	2200	2865	912	53	2990	952	57	3120	993	61	3370	1073	.71	3600	1146	.79
1884	2400	3000	955	64	3100	986	.69	3230	1029	.70	3470	1105	83	3690	1175	92
2041	2600	3130	996	76	3220	1025	82	3350	1066	85	3560	1134	96	3790	1207	1.06
2200	2800				3370	1073	95	3480	1108	1 00	3660	1165	1 11	3890	1239	1 22
2355	3000				3525	1122	1 12	3620	1152	1.15	3770	1200	1.27	3990	1270	1 39
2512	3200							3760	1197	1 35	3970	1264	1.48	4100	1305	1.58
2669	3400										4060	1292	1 70	4240	1350	1 80
2826	3600													4340	1381	2 06
STATIC PRESSURE →		1 3/4″			2″			2 1/4″			2 1/2″			3″		
1414	1800	3700	1178	68	3950	1258	78	4180	1330	. 88						
1570	2000	3750	1194	78	3980	1268	88	4180	1330	.96	4420	1408	1.08			
1727	2200	3830	1220	89	4030	1284	1 00	4230	1347	1 08	4450	1416	1 20	4830	1538	1 42
1884	2400	3910	1245	1 04	4100	1305	1 12	4285	1364	1.23	4480	1426	1.33	4860	1548	1 58
2041	2600	3990	1270	1 17	4180	1330	1.28	4370	1391	1 38	4540	1445	1.50	4900	1560	1 75
2198	2800	4075	1298	1.34	4260	1356	1 45	4465	1422	1.56	4620	1472	1.65	4970	1582	1 92
2355	3000	4155	1324	1 52	4360	1388	1 64	4550	1448	1.75	4700	1496	1.90	5050	1608	2.12
2512	3200	4280	1362	1 72	4460	1420	1 82	4630	1475	1 98	4800	1528	2.12	5150	1640	2 37
2669	3400	4410	1404	1 96	4550	1448	2 06	4725	1504	2.20	4900	1560	2.37	5220	1662	2.63
2826	3600	4520	1440	2 20	4650	1481	2.30	4820	1534	2 48	5000	1592	2.65	5320	1695	2.90
2983	3800	4670	1486	2.50	4800	1528	2 60	4945	1574	2 75	5090	1620	2.95	5410	1724	3.20
3140	4000	4810	1530	2 78	4940	1572	2 95	5055	1610	3 08	5180	1648	3 17	5500	1751	3.55

TABLE 5

No. 15 SINGLE WIDTH SINGLE INLET FAN — TYPE FC

CIRCUM. = 3.93′ WHEEL DIA. 15″ OUTLET AREA = 1.23 SQ. FT.

STATIC PRESSURE →		1/8″			1/4″			3/8″			1/2″			5/8″		
CFM	OUTLET VEL.	Tip Speed	RPM	HP	Tip Speed	RPM	HP	Tip Speed	RPM	HP	Tip Speed	RPM	HP	Tip Speed	RPM	HP
984	800	1115	284	.04	1430	364	07	1710	435	10						
1107	900	1162	296	.05	1470	374	08	1730	440	11	1975	503	15			
1230	1000	1235	314	.07	1510	384	10	1770	450	13	1990	507	17	2210	561	21
1363	1100	1300	331	.09	1560	396	12	1800	458	15	2015	512	19	2225	566	24
1476	1200	1380	351	.11	1615	411	14	1845	470	18	2050	521	.22	2240	570	25
1599	1300	1460	372	13	1675	426	.17	1895	482	21	2090	531	.25	2270	578	29
1722	1400	1650	420	15	1740	443	.20	1945	495	24	2130	542	.28	2310	587	32
1845	1500				1810	460	23	1995	508	.27	2180	554	.31	2350	599	37
1968	1600				1885	480	26	2050	521	31	2230	568	35	2400	611	42
2091	1700				1960	499	30	2120	540	.35	2275	579	40	2450	624	47
2214	1800				2035	517	.35	2170	552	40	2325	591	.45	2500	636	52
2337	1900							2240	570	45	2400	611	51	2545	648	57
2460	2000							2330	592	51	2470	629	.57	2590	660	63
2706	2200										2600	662	70	2760	703	77
2952	2400										2760	700	.86	2950	751	95
STATIC PRESSURE →		3/4″			7/8″			1″			1 1/4″			1 1/2″		
1476	1200	2430	619	31	2610	665	35									
1599	1300	2450	624	34	2630	670	39	2800	713	44						
1722	1400	2485	632	38	2650	675	43	2810	715	48	3110	792	.58			
1845	1500	2525	643	42	2690	685	47	2830	720	52	3130	797	63			
1968	1600	2575	656	46	2725	694	.52	2860	729	57	3150	802	.69	3420	871	82
2091	1700	2610	665	51	2765	704	57	2900	739	62	3175	809	.73	3440	876	88
2214	1800	2660	677	57	2805	714	62	2940	751	68	3200	815	.79	3460	881	93
2337	1900	2705	689	.63	2830	720	69	2980	759	74	3240	826	88	3500	892	99
2460	2000	2750	700	69	2860	729	75	3020	769	81	3290	838	.97	3540	902	1 07
2706	2200	2865	730	81	2990	762	.90	3130	797	96	3370	860	1.10	3600	917	1 24
2952	2400	3000	764	1 01	3100	790	1 07	3230	824	1 14	3470	884	1.29	3690	940	1 43
3198	2600	3130	797	1 18	3220	820	1 28	3350	855	1 35	3560	903	1.49	3790	965	1 66
3444	2800				3370	858	1 50	3480	886	1 58	3660	932	1.74	3890	990	1 91
3690	3000				3525	898	1 74	3620	922	1 84	3770	960	2 00	3990	1016	2 17
3936	3200							3760	958	2 08	3970	1012	2.30	4100	1045	2 46
4182	3400										4060	1033	2.64	4240	1080	2.82
4428	3600													4340	1105	3.22
STATIC PRESSURE →		1 3/4″			2″			2 1/4″			2 1/2″			3″		
2214	1800	3700	943	1 06	3950	1006	1 22									
2460	2000	3750	955	1.22	3980	1014	1 38	4180	1063	1 50	4420	1125	1.67			
2706	2200	3830	975	1 39	4030	1026	1 56	4230	1078	1 70	4450	1133	1 87	4830	1230	2 20
2952	2400	3910	996	1 62	4100	1045	1 75	4285	1091	1 91	4480	1140	2.07	4860	1237	2 46
3198	2600	3990	1016	1 82	4180	1063	1 99	4370	1112	2 14	4540	1156	2 34	4900	1248	2 72
3444	2800	4075	1038	2 09	4260	1085	2.25	4465	1136	2 42	4620	1177	2 58	4970	1266	3 00
3690	3000	4155	1058	2 36	4360	1110	2 55	4550	1159	2 72	4700	1197	2 94	5050	1287	3 32
3936	3200	4280	1090	2 67	4460	1135	2 85	4630	1179	3 04	4800	1223	3 30	5150	1312	3 70
4182	3400	4410	1123	3 04	4550	1159	3 22	4725	1204	3 42	4900	1248	3 70	5220	1330	4 10
4428	3600	4520	1151	3.42	4650	1184	3.60	4820	1228	3 86	5000	1274	4 15	5320	1356	4 52
4674	3800	4670	1189	3.90	4800	1223	4.06	4945	1259	4 30	5090	1297	4 60	5410	1378	5 00
4920	4000	4810	1225	4.33	4940	1258	4 60	5055	1288	4 80	5180	1320	5 00	5500	1401	5 40

All published ratings based on air at 70° F and 29.92″ barometric pressure, and on tests in accordance with N.A.F.M test code.

FC – SWSI

FC – SWSI

TABLE 6

No. 18 SINGLE WIDTH SINGLE INLET FAN — TYPE FC

CIRCUM. = 4.71′ WHEEL DIA. 18″ OUTLET AREA = 1.83 SQ. FT.

STATIC PRESSURE →		1/8"			1/4"			3/8"			1/2"			5/8"		
CFM	OUTLET VEL.	Tip Speed	RPM	HP	Tip Speed	RPM	HP	Tip Speed	RPM	HP	Tip Speed	RPM	HP	Tip Speed	RPM	HP
1416	800	1115	236	.06	1430	304	.10	1710	363	.14						
1593	900	1162	246	.08	1470	312	.12	1730	367	.16	1975	419	.21			
1770	1000	1235	262	.10	1510	320	.14	1770	375	.18	1990	423	.24	2210	469	.28
1947	1100	1300	276	.12	1560	332	.16	1800	382	.21	2015	428	.27	2225	472	.31
2124	1200	1385	294	.15	1615	343	.19	1845	392	.25	2050	435	.30	2240	476	.35
2301	1300	1460	310	.18	1675	356	.23	1895	402	.29	2090	444	.34	2270	482	.40
2478	1400	1650	350	.21	1740	369	.27	1945	413	.33	2130	452	.38	2310	491	.45
2655	1500				1810	384	.31	1995	424	.37	2180	463	.43	2350	500	.50
2832	1600				1885	400	.35	2050	435	.42	2230	473	.49	2400	510	.56
3009	1700				1960	415	.41	2120	450	.48	2275	483	.55	2450	520	.63
3188	1800				2035	432	.48	2170	461	.54	2325	493	.62	2500	530	.70
3363	1900							2240	476	.61	2400	510	.70	2545	540	.78
3540	2000							2330	495	.70	2470	525	.79	2590	550	.87
3894	2200										2600	552	.96	2760	586	1.04
4248	2400										2760	586	1.20	2950	627	1.30
STATIC PRESSURE →		3/4"			7/8"			1"			1 1/4"			1 1/2"		
2124	1200	2430	516	.42	2610	554	.49									
2301	1300	2450	520	.47	2630	559	.54	2800	595	.61						
2478	1400	2485	528	.51	2650	563	.59	2810	597	.65	3110	660	.80			
2655	1500	2525	536	.57	2690	572	.65	2830	602	.72	3130	665	.85			
2832	1600	2575	547	.63	2725	579	.71	2860	608	.79	3150	669	.93	3420	726	1.10
3009	1700	2610	554	.70	2765	587	.78	2900	616	.86	3175	675	1.01	3440	731	1.18
3188	1800	2660	565	.77	2805	596	.86	2940	625	.93	3200	680	1.10	3460	735	1.26
3363	1900	2705	575	.85	2830	602	.94	2980	633	1.03	3240	688	1.21	3500	744	1.36
3540	2000	2750	584	.93	2860	608	1.03	3020	641	1.12	3290	699	1.31	3540	750	1.47
3894	2200	2865	608	1.12	2990	635	1.22	3120	664	1.32	3370	715	1.51	3600	765	1.70
4248	2400	3000	637	1.37	3100	658	1.47	3230	686	1.55	3470	737	1.78	3690	784	1.96
4602	2600	3130	665	1.62	3220	684	1.74	3350	711	1.83	3560	756	2.05	3790	805	2.27
4958	2800				3370	715	2.03	3480	739	2.15	3660	778	2.37	3890	827	2.63
5310	3000				3525	750	2.38	3620	769	2.47	3770	802	2.74	3990	848	3.00
5664	3200							3760	797	2.82	3970	842	3.15	4100	871	3.40
6018	3400										4060	862	3.60	4240	900	3.86
6372	3600													4340	922	4.40
STATIC PRESSURE →		1 3/4"			2"			2 1/4"			2 1/2"			3"		
3188	1800	3700	786	1.50	3950	840	1.67									
3540	2000	3750	797	1.65	3980	846	1.88	4180	889	2.06	4420	938	2.30			
3894	2200	3830	814	1.90	4030	857	2.13	4230	898	2.30	4450	944	2.56	4830	1026	3.05
4248	2400	3910	831	2.20	4100	871	2.40	4285	911	2.62	4480	952	2.83	4860	1034	3.36
4602	2600	3990	848	2.50	4180	889	2.74	4370	928	2.93	4540	965	3.20	4900	1042	3.72
4958	2800	4075	866	2.90	4260	905	3.08	4465	948	3.34	4620	980	3.52	4970	1054	4.10
5310	3000	4155	884	3.25	4360	926	3.48	4550	967	3.74	4700	998	4.07	5050	1070	4.54
5664	3200	4280	910	3.68	4460	947	3.93	4630	985	4.22	4800	1019	4.55	5150	1092	5.07
6018	3400	4410	937	4.18	4550	967	4.40	4725	1003	4.70	4900	1040	5.08	5220	1108	5.60
6372	3600	4520	960	4.62	4650	988	4.92	4820	1023	5.30	5000	1060	5.65	5320	1135	6.20
6728	3800	4670	993	5.26	4800	1019	5.55	4945	1050	5.90	5090	1080	6.20	5410	1151	6.83
7080	4000	4810	1021	5.90	4940	1049	6.25	5055	1072	6.60	5180	1100	6.80	5500	1172	7.57

TABLE 7

No. 21 SINGLE WIDTH SINGLE INLET FAN — TYPE FC

CIRCUM. = 5.5′ WHEEL DIA. 21″ OUTLET AREA = 2.48 SQ. FT.

STATIC PRESSURE →		1/8"			1/4"			3/8"			1/2"			5/8"		
CFM	OUTLET VEL.	Tip Speed	RPM	HP	Tip Speed	RPM	HP	Tip Speed	RPM	HP	Tip Speed	RPM	HP	Tip Speed	RPM	HP
1920	800	1115	202	.08	1430	260	.13	1710	310	.19						
2160	900	1162	211	.11	1470	267	.16	1730	314	.22	1975	359	.28			
2400	1000	1235	224	.14	1510	274	.19	1770	322	.25	1990	362	.32	2210	402	.38
2640	1100	1300	236	.17	1560	283	.22	1800	327	.29	2015	366	.36	2225	405	.44
2880	1200	1380	251	.21	1615	294	.27	1845	335	.34	2050	373	.40	2240	407	.47
3120	1300	1460	265	.25	1675	304	.32	1895	344	.38	2090	380	.45	2270	412	.54
3360	1400	1650	300	.29	1740	316	.36	1945	354	.44	2130	387	.52	2310	420	.60
3600	1500				1810	329	.42	1995	362	.51	2180	396	.60	2350	427	.69
3840	1600				1880	341	.48	2050	373	.57	2230	405	.67	2400	436	.77
4080	1700				1960	356	.56	2120	385	.66	2275	413	.76	2450	446	.86
4320	1800				2035	370	.64	2170	395	.75	2325	422	.85	2500	454	.96
4560	1900							2240	407	.84	2400	436	.95	2545	462	1.05
4800	2000							2330	423	.95	2470	448	1.06	2590	470	1.17
5280	2200										2600	472	1.30	2760	502	1.42
5760	2400										2760	502	1.60	2950	526	1.73
STATIC PRESSURE →		3/4"			7/8"			1"			1 1/4"			1 1/2"		
2880	1200	2430	442	.57	2610	474	.66									
3120	1300	2450	446	.64	2630	478	.73	2800	509	.83						
3360	1400	2485	452	.69	2650	482	.80	2810	511	.90	3110	565	1.10			
3600	1500	2525	458	.77	2690	489	.88	2830	514	.98	3130	569	1.17			
3840	1600	2575	468	.86	2725	496	.96	2860	520	1.06	3150	572	1.26	3420	622	1.50
4080	1700	2610	474	.95	2765	503	1.06	2900	527	1.17	3175	579	1.37	3440	625	1.60
4320	1800	2660	483	1.05	2805	510	1.16	2940	534	1.26	3200	582	1.48	3460	628	1.71
4560	1900	2705	492	1.16	2830	514	1.27	2980	542	1.39	3240	589	1.63	3500	636	1.84
4800	2000	2750	500	1.27	2860	519	1.40	3020	548	1.52	3290	598	1.78	3540	644	2.00
5280	2200	2865	520	1.52	2990	543	1.65	3120	567	1.80	3370	612	2.05	3600	654	2.30
5760	2400	3000	545	1.85	3100	564	2.00	3230	587	2.11	3470	630	2.40	3690	670	2.66
6240	2600	3130	569	2.20	3220	585	2.38	3350	609	2.52	3560	647	2.77	3790	689	3.09
6720	2800				3370	613	2.78	3480	632	2.94	3660	665	3.24	3890	708	3.52
7200	3000				3525	641	3.20	3620	658	3.40	3770	686	3.70	3990	725	4.10
7680	3200							3760	685	3.90	3970	722	4.28	4100	746	4.60
8160	3400										4060	738	4.86	4240	770	5.25
8640	3600													4340	789	6.00
STATIC PRESSURE →		1 3/4"			2"			2 1/4"			2 1/2"			3"		
4320	1800	3700	672	1.98	3950	718	2.27									
4800	2000	3750	682	2.27	3980	724	2.56	4180	760	2.80	4420	804	3.21			
5280	2200	3830	696	2.56	4030	732	2.92	4230	768	3.20	4450	809	3.50	4830	878	4.15
5760	2400	3910	710	3.02	4100	746	3.24	4285	779	3.60	4480	814	3.85	4860	884	4.58
6240	2600	3990	725	3.40	4180	760	3.72	4370	795	4.00	4540	825	4.32	4900	890	5.10
6720	2800	4075	741	3.88	4260	774	4.18	4465	810	4.54	4620	840	4.78	4970	902	5.60
7200	3000	4155	755	4.41	4360	793	4.78	4550	827	5.08	4700	855	5.48	5050	918	6.20
7680	3200	4280	778	5.00	4460	811	5.30	4630	842	5.75	4800	873	6.18	5150	936	6.90
8160	3400	4410	800	5.65	4550	827	6.00	4725	859	6.40	4900	890	6.85	5220	949	7.60
8640	3600	4520	822	6.26	4650	844	6.70	4820	877	7.20	5000	909	7.65	5320	967	8.45
9120	3800	4670	850	7.20	4800	873	7.60	4945	899	8.00	5090	925	8.40	5410	982	9.30
9600	4000	4810	875	8.00	4940	898	8.50	5055	919	8.90	5180	942	9.25	5500	1000	10.2

All published ratings based on air at 70° F. and 29.92″ barometric pressure, and on tests in accordance with N.A.F.M. test code.

All published ratings based on air at 70° F. and 29.92" barometric pressure, and on tests in accordance with N.A.F.M. test code.

TABLE 8

No. 24 SINGLE WIDTH SINGLE INLET FAN — TYPE FC

CIRCUM. = 6.28′ WHEEL DIA. 24" OUTLET AREA = 3.235 SQ. FT.

STATIC PRESSURE →		1/8"			1/4"			3/8"			1/2"			5/8"		
CFM	OUTLET VEL	Tip Speed	RPM	HP	Tip Speed	RPM	HP	Tip Speed	RPM	HP	Tip Speed	RPM	HP	Tip Speed	RPM	HP
2,513	800	1082	172	.12	1405	224	.16	1695	270	.24						
2,827	900	1133	180	14	1435	229	.20	1705	271	.28	1960	312	.36			
3,142	1000	1186	189	.17	1475	235	.24	1730	275	.32	1970	314	.40	2190	349	.49
3,456	1100	1245	198	.21	1510	240	.29	1755	279	.37	1985	316	.45	2195	350	.55
3,770	1200	1310	209	.26	1560	248	.33	1790	285	.42	2005	319	.51	2205	351	.62
4,084	1300	1365	217	.31	1615	257	.39	1835	292	.48	2040	325	.58	2230	355	.68
4,400	1400	1450	231	.37	1670	266	.46	1880	299	.56	2075	330	.66	2260	360	.76
4,711	1500				1730	275	.53	1930	307	.65	2120	338	.75	2295	365	.85
5,026	1600				1790	285	.62	1980	315	.74	2165	345	.85	2335	372	.96
5,340	1700				1850	295	.73	2030	323	.84	2215	353	.96	2375	378	1.08
5,654	1800				1900	303	.83	2085	332	.95	2267	361	1.07	2425	386	1.20
5,969	1900							2160	344	1 06	2320	369	1.19	2475	394	1.33
6,283	2000							2220	354	1.20	2375	378	1.33	2525	402	1.48
6,912	2200										2490	396	1.66	2645	421	1.80
7,540	2400										2620	417	2.00	2740	436	2.20
STATIC PRESSURE →		3/4"			7/8"			1"			1 1/4"			1 1/2"		
3,770	1200	2405	383	.72	2600	414	.83									
4,084	1300	2415	385	.79	2610	416	.91	2770	441	1.04						
4,400	1400	2440	389	.87	2615	416	1.00	2780	443	1.12	3100	494	1.38			
4,711	1500	2465	393	.95	2630	419	1.08	2790	444	1.22	3110	495	1 48			
5,026	1600	2500	398	1.07	2660	424	1.20	2810	447	1.32	3120	497	1.60	3390	540	1.90
5,340	1700	2540	404	1.18	2695	429	1.30	2835	451	1.44	3130	498	1.72	3400	541	2.03
5,654	1800	2585	412	1 33	2725	434	1.44	2870	457	1.59	3145	501	1.85	3410	543	2.18
5,969	1900	2625	418	1.47	2760	439	1.60	2900	462	1.75	3170	505	2.02	3430	546	2.34
6,283	2000	2675	426	1.62	2810	447	1.78	2950	470	1.92	3200	510	2.20	3460	551	2.48
6,912	2200	2780	443	1.96	2900	462	2.12	3020	481	2.28	3280	522	2.58	3510	559	2.86
7,540	2400	2890	460	2.38	3010	479	2.52	3120	497	2.66	3360	535	3.05	3580	570	3.32
8,168	2600	3000	478	2.80	3125	498	3.00	3230	514	3.13	3450	549	3.53	3670	584	3.90
8,800	2800	3130	498	3.30	3240	516	3 50	3340	532	3.70	3560	567	4.10	3760	599	4.50
9,422	3000				3350	533	4.10	3460	551	4.30	3670	584	4.70	3860	615	5.15
10,052	3200							3580	570	5.00	3780	602	5.38	3960	631	5.80
10,680	3400										3890	619	6.10	4065	647	6.60
11,308	3600													4175	665	7.50
STATIC PRESSURE →		1 3/4"			2"			2 1/4"			2 1/2"			3"		
5,654	1800	3675	585	2.56	3920	624	2.85									
6,283	2000	3690	588	2.85	3940	627	3.20	4170	664	3.66	4380	697	3.87			
6,912	2200	3740	596	3.24	3970	632	3.60	4175	665	4.00	4390	699	4.40	4800	764	5.20
7,540	2400	3805	606	3.72	4010	639	4.10	4210	670	4.46	4410	702	4.90	4810	766	5.70
8,168	2600	3885	619	4.24	4080	650	4.62	4265	679	5 05	4460	710	5.45	4830	769	6.32
8,800	2800	3975	633	4.88	4150	661	5 22	4350	693	5.70	4520	720	6.10	4880	777	7.00
9,422	3000	4060	646	5.56	4240	675	6.00	4425	705	6.45	4590	731	6.85	4930	785	7.70
10,052	3200	4150	661	6.31	4330	689	6.80	4500	717	7.22	4670	744	7.70	5000	796	8.55
10,680	3400	4240	675	7.15	4430	705	7.60	4590	731	8.12	4750	756	8.65	5080	809	9.50
11,308	3600	4350	693	8.00	4535	722	8.45	4690	747	9.05	4850	772	9.70	5170	823	10.6
11,937	3800	4460	710	9.00	4640	739	9.50	4800	764	10.1	4950	788	10.7	5250	836	11.8
12,566	4000	4580	729	10.0	4745	756	10.6	4915	783	11.2	5050	804	11.8	5350	852	13.0

TABLE 9

No. 27 SINGLE WIDTH SINGLE INLET FAN — TYPE FC

CIRCUM. = 7.07′ WHEEL DIA. 27" OUTLET AREA = 4.100 SQ. FT.

STATIC PRESSURE →		1/8"			1/4"			3/8"			1/2"			5/8"		
CFM	OUTLET VEL.	Tip Speed	RPM	HP	Tip Speed	RPM	HP	Tip Speed	RPM	HP	Tip Speed	RPM	HP	Tip Speed	RPM	HP
3,181	800	1082	153	.15	1405	199	.20	1695	240	.30						
3,578	900	1133	160	.17	1435	203	.25	1705	241	.35	1960	277	.46			
3,976	1000	1186	168	.21	1475	209	.30	1730	245	.40	1970	279	.51	2240	317	.67
4,374	1100	1245	176	.26	1510	214	.36	1755	248	.46	1985	281	.57	2263	319	.72
4,771	1200	1310	185	.32	1560	221	.42	1790	253	.53	2005	284	.65	2268	321	.80
5,169	1300	1365	193	.38	1615	228	.50	1835	260	.61	2040	289	.73	2275	322	.89
5,566	1400	1450	205	.46	1670	236	.59	1880	266	.70	2075	293	.84	2282	323	.99
5,964	1500				1730	245	.68	1930	273	.82	2120	300	.95	2310	326	1.1
6,362	1600				1790	253	.79	1980	280	.93	2165	306	1.07	2325	329	1.23
6,759	1700				1850	262	.91	2030	287	1.05	2215	313	1.20	2382	337	1.36
7,156	1800				1900	269	1.04	2085	295	1.20	2267	321	1.35	2430	344	1.53
7,554	1900							2160	306	1.34	2320	328	1.50	2475	351	1.69
7,952	2000							2220	314	1.50	2372	336	1 67	2528	358	1.87
8,747	2200										2490	352	2.10	2640	374	2.28
9,542	2400													2755	390	2.74
STATIC PRESSURE →		3/4"			7/8"			1"			1 1/4"			1 1/2"		
4,771	1200	2405	340	.90	2600	368	1.05									
5,169	1300	2415	342	1.00	2610	369	1.15	2770	392	1.31						
5,566	1400	2440	345	1.10	2615	370	1.25	2780	393	1.40	3100	438	1.75			
5,964	1500	2465	349	1.20	2630	372	1.37	2790	395	1 52	3110	440	1.87			
6,362	1600	2500	354	1.35	2660	376	1.51	2810	397	1.66	3120	441	2 02	3390	479	2.40
6,759	1700	2540	359	1.50	2695	381	1.64	2835	401	1.81	3130	443	2.18	3400	481	2.56
7,156	1800	2585	366	1.67	2725	385	1.82	2870	406	2.00	3145	445	2.34	3410	482	2.75
7,554	1900	2625	371	1.85	2760	390	2.02	2900	410	2.21	3170	448	2.54	3430	485	2.95
7,952	2000	2675	378	2.05	2810	397	2.25	2950	417	2.43	3200	453	2.78	3460	489	3.16
8,747	2200	2780	393	2.50	2900	410	2.68	3020	427	2.86	3280	464	3.25	3510	496	3.60
9,542	2400	2890	409	2 93	3010	426	3.18	3120	441	3.40	3360	475	3.85	3580	506	4.20
10,337	2600	3000	424	3.53	3125	442	3.74	3230	457	3.96	3450	488	4.45	3670	519	4.92
11,133	2800	3130	443	4.20	3240	458	4.40	3340	472	4.68	3560	504	5.15	3760	532	5.70
11,928	3000				3350	474	5.10	3460	489	5.40	3670	519	5.92	3860	546	6.52
12,723	3200							3580	506	6.30	3780	535	6.80	3960	560	7.30
13,518	3400										3890	550	7.70	4065	575	8.32
14,312	3600													4175	591	9.45
STATIC PRESSURE →		1 3/4"			2"			2 1/4"			2 1/2"			3"		
7,156	1800	3675	520	3.23	3920	554	3.60									
7,952	2000	3690	522	3.60	3940	557	4.05	4170	590	4.60	4480	634	5.36			
8,747	2200	3740	529	4.10	3970	562	4.56	4180	591	5.05	4526	638	5.76	4800	679	6.52
9,542	2400	3805	538	4.68	4010	567	5 15	4210	595	5.62	4536	642	6.40	4810	680	7.20
10,337	2600	3885	550	5 34	4080	577	5.83	4265	603	6.35	4550	644	7.12	4830	683	7.95
11,133	2800	3975	562	6.14	4150	587	6.63	4350	615	7.25	4564	646	7.92	4880	690	8 80
11,928	3000	4060	574	7.02	4240	600	7.60	4425	626	8.20	4620	652	8.80	4930	697	9.70
12,723	3200	4150	587	7.93	4330	612	8.60	4500	636	9.20	4650	658	9.84	5000	707	10.7
13,518	3400	4240	600	9.00	4430	627	9.61	4590	649	10.3	4764	674	10.88	5080	719	11.9
14,312	3600	4350	615	10.1	4535	641	10.6	4690	663	11.4	4860	688	12.3	5170	731	13.3
15,108	3800	4460	631	11.3	4640	656	12.0	4800	679	12.7	4950	702	13.5	5250	743	14.8
15,904	4000	4580	648	12.6	4745	671	13.4	4915	695	14.1	5056	716	14.9	5350	757	16.3

All published ratings based on air at 70° F. and 29.92" barometric pressure, and on tests in accordance with N.A.F.M. test code.

FC – SWSI

FC – SWSI

TABLE 10

No. 30 SINGLE WIDTH SINGLE INLET FAN — TYPE FC

CIRCUM. = 7.85′ WHEEL DIA. 30″ OUTLET AREA = 5.06 SQ. FT.

STATIC PRESSURE ▶		⅛″			¼″			⅜″			½″			⅝″		
CFM	OUTLET VEL.	Tip Speed	RPM	HP	Tip Speed	RPM	HP	Tip Speed	RPM	HP	Tip Speed	RPM	HP	Tip Speed	RPM	HP
3,920	800	1060	135	.17	1388	177	.26									
4,410	900	1105	141	.21	1418	181	.31	1690	215	.43						
4,900	1000	1165	148	.26	1450	185	.37	1710	218	.49						
5,390	1100	1220	155	.32	1497	191	.45	1730	220	.57	1965	250	.70	2185	278	.87
5,880	1200	1290	164	.39	1530	195	.52	1760	224	.66	1980	252	.80	2195	279	.97
6,370	1300	1350	172	.47	1577	201	.61	1790	228	.76	2005	255	.89	2205	281	1.07
6,860	1400	1420	181	.55	1635	208	.72	1835	234	.87	2040	260	1.02	2225	283	1.18
7,350	1500				1690	215	.83	1885	240	1.00	2080	265	1.16	2255	287	1.34
7,840	1600				1755	223	.97	1940	247	1.14	2120	270	1.32	2290	292	1.50
8,330	1700				1820	232	1.10	1995	254	1.28	2168	276	1.48	2330	297	1.69
8,820	1800				1890	241	1.22	2050	261	1.46	2210	281	1.63	2375	302	1.89
9,310	1900							2105	268	1.63	2270	289	1.85	2425	309	2.10
9,800	2000							2162	275	1.80	2330	297	2.06	2475	315	2.30
10,780	2200										2440	311	2.53	2615	333	2.80
11,760	2400										2580	328	3.10	2735	348	3.37
STATIC PRESSURE ▶		¾″			⅞″			1″			1 ¼″			1 ½″		
5,880	1200															
6,370	1300	2390	304	1.24												
6,860	1400	2415	307	1.37	2590	330	1.56	2765	352	1.75						
7,350	1500	2425	309	1.49	2600	331	1.70	2770	353	1.90						
7,840	1600	2455	313	1.68	2620	334	1.88	2776	353	2.06	3090	393	2.50			
8,330	1700	2495	318	1.86	2650	337	2.04	2800	357	2.25	3100	395	2.70			
8,820	1800	2540	323	2.05	2680	341	2.26	2835	361	2.46	3110	396	2.90	3380	430	3.41
9,310	1900	2575	328	2.28	2720	346	2.50	2865	365	2.73	3125	398	3.16	3390	432	3.66
9,800	2000	2620	334	2.55	2770	353	2.80	2900	369	3.00	3165	403	3.46	3420	435	3.92
10,780	2200	2710	345	3.10	2850	363	3.32	2995	381	3.55	3225	411	4.05	3460	441	4.52
11,760	2400	2820	359	3.64	2940	374	3.94	3060	390	4.20	3300	420	4.79	3520	448	5.22
12,740	2600	2930	373	4.30	3060	390	4.65	3155	402	4.88	3385	431	5.53	3580	456	6.10
13,720	2800	3040	387	5.10	3170	404	5.40	3270	416	5.75	3480	443	6.40	3670	467	7.00
14,700	3000				3280	418	6.35	3380	430	6.65	3580	456	7.35	3770	480	8.10
15,680	3200							3500	446	7.80	3700	471	8.45	3880	494	9.10
16,660	3400										3820	486	9.60	3990	508	10.3
17,640	3600													4100	522	11.7
STATIC PRESSURE ▶		1 ¾″			2″			2 ¼″			2 ½″			3″		
8,820	1800	3660	466	3.90												
9,800	2000	3670	467	4.47	3920	499	5.02									
10,780	2200	3690	470	5.08	3930	500	5.63	4150	528	6.20	4370	556	6.85			
11,760	2400	3750	477	5.80	3960	504	6.35	4175	532	6.95	4390	559	7.65			
12,740	2600	3820	486	6.60	4010	511	7.25	4215	537	7.85	4410	561	8.55	4780	609	9.90
13,720	2800	3885	495	7.62	4080	519	8.15	4275	544	8.95	4450	567	9.60	4830	615	10.9
14,700	3000	3960	504	8.69	4160	530	9.40	4340	553	10.1	4510	574	10.7	4850	618	12.0
15,680	3200	4050	516	9.80	4240	540	10.6	4410	561	11.3	4580	583	12.0	4910	625	13.3
16,660	3400	4150	528	11.1	4336	552	11.8	4485	571	12.7	4660	593	13.5	4990	635	14.8
17,640	3600	4255	542	12.6	4420	563	13.2	4580	583	14.2	4750	605	15.2	5080	647	16.5
18,620	3800	4380	558	14.2	4540	578	14.8	4685	597	15.8	4850	618	16.8	5150	656	18.4
19 600	4000	4550	579	15.8	4660	593	16.6	4820	614	17.5	4950	630	18.5	5240	667	20.2

TABLE 11

No. 33 SINGLE WIDTH SINGLE INLET FAN — TYPE FC

CIRCUM. = 8.64′ WHEEL DIA. 33″ OUTLET AREA = 5.94 SQ. FT.

STATIC PRESSURE ▶		⅛″			¼″			⅜″			½″			⅝″		
CFM	OUTLET VEL.	Tip Speed	RPM	HP	Tip Speed	RPM	HP	Tip Speed	RPM	HP	Tip Speed	RPM	HP	Tip Speed	RPM	HP
4,752	800	1060	123	.19	1388	161	.31									
5,346	900	1105	128	.24	1418	164	.37	1690	196	.50						
5,940	1000	1165	135	.30	1450	168	.44	1710	198	.57						
6,534	1100	1220	141	.37	1497	173	.51	1730	200	.66	1965	227	.83	2185	253	1.01
7,128	1200	1290	149	.45	1530	177	.60	1760	204	.76	1980	229	.93	2195	254	1.12
7,722	1300	1350	156	.54	1577	183	.70	1790	207	.87	2005	232	1.05	2205	255	1.24
8,316	1400	1420	164	.63	1635	189	.82	1835	212	1.00	2040	236	1.18	2225	258	1.38
8,910	1500				1690	196	.94	1885	218	1.12	2080	241	1.34	2255	261	1.55
9,504	1600				1755	203	1.09	1940	225	1.28	2120	245	1.49	2290	265	1.74
10,098	1700				1820	211	1.25	1995	231	1.48	2168	251	1.67	2330	270	1.93
10,692	1800				1890	219	1.44	2050	237	1.67	2210	256	1.88	2375	275	2.14
11,286	1900							2105	244	1.88	2270	263	2.12	2425	281	2.37
11,880	2000							2162	250	2.10	2330	270	2.37	2475	286	2.58
13,068	2200										2440	282	2.92	2615	302	3.16
14,256	2400										2580	299	3.56	2735	317	3.85
STATIC PRESSURE ▶		¾″			⅞″			1″			1 ¼″			1 ½″		
7,128	1200															
7,722	1300	2390	277	1.48												
8,316	1400	2415	280	1.60	2590	300	1.86	2765	320	2.08						
8,910	1500	2425	281	1.76	2600	301	2.03	2770	321	2.25						
9,504	1600	2455	284	1.95	2620	303	2.20	2776	321	2.44	3090	358	2.96			
10,098	1700	2495	289	2.15	2650	307	2.40	2800	324	2.65	3100	359	3.16			
10,692	1800	2540	294	2.37	2680	310	2.65	2835	328	2.88	3110	360	3.40	3380	391	4.00
11,286	1900	2575	298	2.60	2720	315	2.88	2865	332	3.14	3125	362	3.70	3390	392	4.25
11,880	2000	2620	303	2.84	2770	321	3.16	2900	336	3.42	3165	366	4.10	3420	396	4.55
13,068	2200	2710	314	3.42	2850	330	3.72	2995	347	4.06	3225	373	4.65	3460	400	5.20
14,256	2400	2820	326	4.15	2940	340	4.44	3060	354	4.74	3300	382	5.45	3520	407	6.05
15,444	2600	2930	339	4.95	3060	354	5.26	3155	365	5.57	3385	392	6.26	3580	414	6.96
16,632	2800	3040	352	5.75	3170	367	6.20	3270	378	6.55	3480	403	7.25	3670	425	7.90
17,820	3000				3280	380	7.20	3380	391	7.62	3580	414	8.25	3770	436	9.00
19,008	3200							3500	405	8.75	3700	428	9.60	3880	449	10.3
20,196	3400										3820	442	11.0	3990	462	11.6
21,384	3600													4100	475	13.4
STATIC PRESSURE ▶		1 ¾″			2″			2 ¼″			2 ½″			3″		
10,692	1800	3660	424	4.65												
11,880	2000	3670	425	5.27	3920	454	5.95									
13,068	2200	3690	427	6.00	3930	455	6.65	4150	480	7.20	4370	506	8.10			
14,256	2400	3750	434	6.90	3960	458	7.30	4175	483	8.10	4390	508	9.00	4810	557	10.5
15,444	2600	3820	442	7.70	4010	464	8.35	4215	488	9.05	4410	510	9.90	4780	558	11.8
16,632	2800	3885	450	8.80	4080	472	9.40	4275	495	10.2	4450	515	10.9	4830	559	12.8
17,820	3000	3960	458	10.0	4160	481	10.7	4340	502	11.4	4510	522	12.4	4850	561	14.0
19,008	3200	4050	469	11.2	4240	491	11.8	4410	510	12.8	4580	530	13.8	4910	568	15.4
20,196	3400	4150	480	12.6	4336	502	13.4	4485	519	14.3	4660	539	15.4	4990	578	17.0
21,384	3600	4255	492	14.0	4420	512	15.0	4580	530	16.0	4750	550	17.2	5080	588	18.8
22,572	3800	4380	507	16.2	4540	525	16.9	4685	542	17.8	4850	561	19.0	5150	596	20.5
23,760	4000	4550	527	17.8	4660	539	19.0	4820	558	19.8	4950	573	21.0	5240	606	22.7

All published ratings based on air at 70° F. and 29.92″ barometric pressure, and on tests in accordance with N.A.F.M test code

TABLE 12

No. 36 SINGLE WIDTH SINGLE INLET FAN — TYPE FC

CIRCUM. = 9.425′ WHEEL DIA. 36″ OUTLET AREA = 7.07 SQ. FT.

STATIC PRESSURE →		1/8"			1/4"			3/8"			1/2"			5/8"		
CFM	OUTLET VEL.	Tip Speed	RPM	HP	Tip Speed	RPM	HP	Tip Speed	RPM	HP	Tip Speed	RPM	HP	Tip Speed	RPM	HP
5,656	800	1060	112	.23	1388	147	.37									
6,363	900	1105	117	.28	1418	150	.44	1690	179	.59						
7,070	1000	1165	124	.36	1450	154	.52	1710	181	.67						
7,777	1100	1220	129	.44	1497	159	.60	1730	184	.78	1965	208	.98	2185	232	1.20
8,484	1200	1290	137	.53	1530	162	.71	1760	187	.90	1980	210	1.10	2195	233	1.33
9,191	1300	1350	143	.64	1577	167	.82	1790	190	1.04	2005	213	1.25	2205	234	1.46
9,898	1400	1420	151	.75	1635	173	.96	1835	195	1.18	2040	216	1.40	2225	236	1.63
10,605	1500				1690	179	1.12	1885	200	1.34	2080	221	1.59	2255	239	1.84
11,312	1600				1755	186	1.29	1940	206	1.52	2120	225	1.78	2290	243	2.06
12,019	1700				1820	193	1.48	1995	212	1.75	2168	230	1.99	2330	247	2.30
12,726	1800				1890	201	1.71	2050	218	1.98	2210	234	2.22	2375	252	2.54
13,433	1900							2105	223	2.24	2270	241	2.52	2425	257	2.82
14,140	2000							2162	229	2.50	2330	247	2.82	2475	263	3.06
15,554	2200										2440	259	3.46	2615	277	3.76
16,968	2400													2735	290	4.57
STATIC PRESSURE →		3/4"			7/8"			1"			1 1/4"			1 1/2"		
8,484	1200															
9,191	1300	2390	254	1.75												
9,898	1400	2415	256	1.90	2590	275	2.22	2765	293	2.46						
10,605	1500	2425	257	2.08	2600	276	2.43	2770	294	2.66						
11,312	1600	2455	260	2.30	2620	278	2.62	2776	295	2.88	3090	328	3.52			
12,019	1700	2495	265	2.54	2650	281	2.84	2800	297	3.15	3100	329	3.75			
12,726	1800	2540	269	2.82	2680	284	3.12	2835	301	3.41	3110	330	4.03	3380	359	4.75
13,433	1900	2575	273	3.10	2720	289	3.42	2865	304	3.72	3125	332	4.40	3390	360	5.05
14,140	2000	2620	278	3.36	2770	294	3.74	2900	308	4.05	3165	336	4.84	3420	363	5.40
15,554	2200	2710	288	4.06	2850	302	4.40	2995	318	4.82	3225	342	5.50	3460	367	6.15
16,968	2400	2820	299	4.92	2940	312	5.26	3060	325	5.63	3300	350	6.44	3520	373	7.15
18,382	2600	2930	311	5.88	3060	325	6.24	3155	335	6.60	3385	359	7.40	3580	380	8.25
19,796	2800	3040	323	6.85	3170	336	7.35	3270	347	7.78	3480	369	8.60	3670	389	9.40
21,210	3000				3280	348	8.60	3380	359	9.00	3580	380	9.80	3770	400	10.7
22,624	3200							3500	371	10.3	3700	393	11.3	3880	412	12.2
24,038	3400										3820	405	13.0	3990	423	13.8
25,452	3600													4100	435	15.9
STATIC PRESSURE →		1 3/4"			2"			2 1/4"			2 1/2"			3"		
12,726	1800	3660	388	5.53												
14,140	2000	3670	389	6.25	3920	416	7.05									
15,554	2200	3690	392	7.15	3930	417	7.90	4150	440	8.55	4370	464	9.60			
16,968	2400	3750	398	8.20	3960	420	8.75	4175	443	9.60	4390	466	10.6			
18,382	2600	3820	405	9.10	4010	425	9.90	4215	447	10.7	4410	468	11.8	4780	507	14.0
19,796	2800	3885	412	10.5	4080	433	11.1	4275	454	12.1	4450	472	13.1	4830	512	15.2
21,210	3000	3960	420	11.8	4160	441	12.6	4340	460	13.6	4510	479	14 7	4850	515	16.7
22,624	3200	4050	430	13.3	4240	450	14.1	4410	468	15.2	4580	486	16 4	4910	521	18.3
24,038	3400	4150	440	15.0	4336	460	15.9	4485	476	17.0	4660	494	18.3	4990	529	20.2
25,452	3600	4255	451	16.6	4420	469	17.8	4580	486	19.0	4750	504	20.5	5080	539	22.3
26,866	3800	4380	465	19.2	4540	482	20.1	4685	497	21.2	4850	515	22.5	5150	546	24.4
28,280	4000	4550	483	21.2	4660	494	22.5	4820	511	23.6	4950	525	25.0	5240	556	27.0

TABLE 13

No. 40 SINGLE WIDTH SINGLE INLET FAN — TYPE FC

CIRCUM. = 10.55′ WHEEL DIA. 40¼″ OUTLET AREA = 8.86 SQ. FT.

STATIC PRESSURE →		1/8"			1/4"			3/8"			1/2"			5/8"		
CFM	OUTLET VEL.	Tip Speed	RPM	HP	Tip Speed	RPM	HP	Tip Speed	RPM	HP	Tip Speed	RPM	HP	Tip Speed	RPM	HP
7,088	800	1060	100	.29	1388	131	.46									
7,974	900	1105	105	.35	1418	135	.55	1690	160	.74						
8,860	1000	1165	110	.45	1450	138	.65	1710	162	.84	1960	186	1.10			
9,746	1100	1220	116	55	1497	141	.76	1730	164	.98	1965	186	1.23	2185	207	1.50
10,632	1200	1290	122	.66	1530	145	.89	1760	167	1.13	1980	188	1.38	2195	208	1.65
11,518	1300	1350	128	.80	1577	149	1.03	1790	170	1.31	2005	191	1.57	2205	209	1.82
12,404	1400	1420	135	.94	1635	155	1.20	1835	174	1.47	2040	194	1.75	2225	211	2.04
13,290	1500				1690	160	1.40	1885	179	1.67	2080	197	1.98	2255	213	2.30
14,176	1600				1755	166	1.62	1940	184	1.89	2120	201	2 21	2290	217	2.60
15,062	1700				1820	172	1.86	1995	189	2.17	2168	206	2.48	2330	221	2.88
15,948	1800				1890	179	2.13	2050	194	2.46	2210	210	2.78	2375	225	3.18
16,834	1900							2105	200	2.81	2270	215	3.15	2425	230	3.53
17,720	2000							2162	205	3.13	2330	221	3.53	2475	234	3.83
19,492	2200										2440	231	4.32	2615	248	4.71
21,264	2400										2580	244	5.30	2735	259	5.70
STATIC PRESSURE →		3/4"			7/8"			1"			1 1/4"			1 1/2"		
10,632	1200															
11,518	1300	2390	227	2.20												
12,404	1400	2415	229	2.38	2590	246	2.78	2765	262	3.09						
13,290	1500	2425	230	2.62	2600	247	3.03	2770	263	3.35						
14,176	1600	2455	232	2.88	2620	248	3.27	2776	263	3.64	3090	293	4.41			
15,062	1700	2495	236	3.17	2650	251	3.53	2800	265	3.95	3100	294	4.69			
15,948	1800	2540	241	3.53	2680	254	3.91	2835	268	4.27	3110	295	5.04	3380	320	5.93
16,834	1900	2575	244	3.88	2720	258	4.28	2865	271	4.67	3125	297	5.50	3390	321	6.32
17,720	2000	2620	248	4.21	2770	263	4.66	2900	275	5.07	3165	300	6.07	3420	324	6.76
19,492	2200	2710	257	5.07	2850	270	5.52	2995	283	6.02	3225	306	6.88	3460	328	7.70
21,264	2400	2820	267	6.16	2940	279	6.58	3060	290	7.03	3300	313	8.07	3520	334	8.96
23,036	2600	2930	278	7.35	3060	290	7.81	3155	299	8.28	3385	321	9.30	3580	340	10.3
24,808	2800	3040	288	8.73	3170	300	9.21	3270	310	9.75	3480	330	10.7	3670	348	11.8
26,580	3000				3280	311	10.7	3380	320	11.2	3580	339	12.2	3770	357	13.4
28,352	3200							3500	332	12.9	3700	351	14.1	3880	368	15.3
30,122	3400										3820	362	16.2	3990	378	17 4
31,896	3600													4100	389	20.0
STATIC PRESSURE →		1 3/4"			2"			2 1/4"			2 1/2"			3"		
15,948	1800	3660	347	6 90												
17,720	2000	3670	348	7.83	3920	371	8.84									
19,492	2200	3690	350	8.98	3930	372	9.90	4150	393	10.7	4370	414	12.1			
21,264	2400	3750	355	10.3	3960	375	10.9	4175	396	12.1	4390	416	13.4	4810	456	15.7
23,036	2600	3820	362	11.4	4010	380	12.4	4215	399	13.4	4410	418	14.9	4780	453	17.5
24,808	2800	3885	368	13.2	4080	387	14.0	4275	405	15.1	4450	422	16.4	4830	458	19.2
26,580	3000	3960	375	14.7	4160	394	15.8	4340	413	17.0	4510	427	18.4	4850	460	20.9
28,352	3200	4050	384	16.7	4240	402	17.7	4410	418	19.2	4580	434	20.6	4910	465	23 0
30,122	3400	4150	393	18.8	4336	411	19.9	4485	425	21.4	4660	442	23.0	4990	473	25.4
31,896	3600	4255	403	20.8	4420	419	22.3	4580	434	23.9	4750	450	25.7	5080	481	28.0
33,668	3800	4380	415	24.1	4540	430	25.2	4685	444	26.6	4850	460	28.3	5150	488	30.6
35,440	4000	4550	431	26.7	4660	442	28.4	4820	457	29.6	4950	469	31.3	5240	496	33.8

FC – SWSI

FC – SWSI

TABLE 14

No. 44 SINGLE WIDTH SINGLE INLET FAN — TYPE FC

CIRCUM. = 11.65′ WHEEL DIA. 44½″ OUTLET AREA = 10.8 SQ. FT.

STATIC PRESSURE →		⅛″			¼″			⅜″			½″			⅝″		
CFM	OUTLET VEL.	Tip Speed	RPM	HP	Tip Speed	RPM	HP	Tip Speed	RPM	HP	Tip Speed	RPM	HP	Tip Speed	RPM	HP
8,640	800	1060	91	35	1388	119	.56									
9,720	900	1105	95	.43	1418	121	.68	1690	145	90						
10,800	1000	1165	100	.55	1450	124	.80	1710	146	1.03	1960	168	1.35			
11,880	1100	1220	105	.68	1497	128	.92	1730	148	1.19	1965	169	1.51	2185	187	1.83
12,960	1200	1290	110	.81	1530	131	1.09	1760	151	1.38	1980	170	1.69	2195	188	2.02
14,040	1300	1350	116	.98	1577	135	1.26	1790	154	1.60	2005	172	1.92	2205	189	2.22
15,120	1400	1420	122	1.15	1635	140	1.47	1835	157	1.80	2040	175	2.14	2225	191	2.50
16,200	1500				1690	145	1.71	1885	162	2.04	2080	178	2.43	2255	193	2.81
17,280	1600				1755	151	1.98	1940	166	2.30	2120	182	2.70	2290	196	3.17
18,360	1700				1820	156	2.27	1995	171	2.65	2168	186	3.04	2330	200	3.52
19,440	1800				1890	162	2.61	2050	176	3.01	2210	190	3.40	2375	204	3.89
20,520	1900							2105	181	3.43	2270	195	3.84	2425	208	4.32
21,600	2000							2162	186	3.82	2330	200	4.31	2475	212	4.68
23,760	2200										2440	209	5.29	2615	224	5.75
25,920	2400										2580	221	6.48	2735	234	6.97
STATIC PRESSURE →		¾″			⅞″			1″			1¼″			1½″		
12,960	1200															
14,040	1300	2390	205	2.69												
15,120	1400	2415	207	2.91	2590	222	3.39									
16,200	1500	2425	208	3.19	2600	223	3.71	2770	237	4.09						
17,280	1600	2455	211	3.52	2620	225	4.00	2776	238	4.45	3090	265	5.39			
18,360	1700	2495	214	3.87	2650	227	4.31	2800	240	4.83	3100	266	5.73			
19,440	1800	2540	218	4.31	2680	230	4.78	2835	243	5.23	3110	267	6.16	3380	290	7.25
20,520	1900	2575	221	4.74	2720	233	5.23	2865	246	5.71	3125	269	6.72	3390	291	7.74
21,600	2000	2620	225	5.15	2770	237	5.70	2900	249	6.21	3165	271	7.42	3420	293	8.26
23,760	2200	2710	232	6.20	2850	244	6.75	2995	257	7.36	3225	277	8.41	3460	297	9.41
25,920	2400	2820	242	7.53	2940	252	8.04	3060	262	8.60	3300	283	9.85	3520	302	10.9
28,080	2600	2930	252	9.00	3060	263	9.55	3155	270	10.1	3385	290	11.3	3580	307	12.6
30,240	2800	3040	261	10.7	3170	272	11.2	3270	280	11.9	3480	298	13.1	3670	315	14.4
32,400	3000				3280	282	13.1	3380	290	13.7	3580	307	14.9	3770	323	16 4
34,560	3200							3510	301	15.7	3700	318	17.3	3880	333	18.6
36,720	3400										3820	328	19.9	3990	342	21.2
38,880	3600													4100	352	24.5
STATIC PRESSURE →		1¾″			2″			2¼″			2½″			3″		
19,440	1800	3660	314	8 42												
21,600	2000	3670	315	9.55	3920	336	10.8									
23,760	2200	3690	317	10.9	3930	337	12.1	4150	356	13.0	4370	375	14.7			
25,920	2400	3750	322	12.6	3960	340	13.4	4175	358	14.7	4390	377	16 3			
28,080	2600	3820	328	13.9	4010	344	15.2	4215	362	16.4	4410	378	18.2	4780	410	21.4
30,240	2800	3885	333	16.1	4080	350	17.1	4275	366	18.4	4450	382	20.0	4830	415	23.4
32,400	3000	3960	340	18.0	4160	357	19.3	4340	372	20.8	4510	387	22.5	4850	416	25.5
34,560	3200	4050	347	20 3	4240	364	21.6	4410	378	23.4	4580	393	25.2	4910	422	28.1
36,720	3400	4150	356	22.9	4336	372	24.3	4485	385	26.1	4660	400	28.1	4990	428	31 0
38,880	3600	4255	365	25.4	4420	379	27.2	4580	393	29.1	4750	408	31.4	5080	436	34.2
41,040	3800	4380	376	29.4	4540	390	30.8	4685	402	32.4	4850	416	34.5	5150	442	37.3
43,200	4000	4550	391	32.6	4660	400	34.6	4820	414	36.1	4950	425	38.2	5240	450	41.3

TABLE 15

No. 49 SINGLE WIDTH SINGLE INLET FAN — TYPE FC

CIRCUM. = 12.83′ WHEEL DIA. 49″ OUTLET AREA = 13.09 SQ. FT.

STATIC PRESSURE →		⅛″			¼″			⅜″			½″			⅝″		
CFM	OUTLET VEL.	Tip Speed	RPM	HP	Tip Speed	RPM	HP	Tip Speed	RPM	HP	Tip Speed	RPM	HP	Tip Speed	RPM	HP
10,472	800	1060	82	.43	1388	108	.68									
11,781	900	1105	86	.51	1418	110	.79	1690	131	1.09						
13,090	1000	1165	91	.66	1450	113	.95	1710	133	1.25	1960	152	1 62			
14,399	1100	1220	95	.81	1490	116	1.11	1730	135	1.43	1965	153	1.82	2185	170	2.20
15.708	1200	1290	100	.98	1530	119	1.31	1760	137	1.66	1980	154	2.02	2195	171	2.44
17,017	1300	1350	105	1.18	1577	123	1 52	1790	140	1.93	2005	156	2.32	2205	172	2.68
18,326	1400	1420	111	1.38	1635	127	1.79	1835	143	2.16	2040	159	2.58	2225	173	3.02
19,635	1500				1690	132	2.06	1885	147	2.48	2080	162	2.93	2255	175	3.39
20,944	1600				1755	137	2.39	1940	151	2.81	2120	165	3.25	2290	178	3.72
22,253	1700				1820	142	2.74	1995	155	3.21	2168	169	3.66	2330	181	4.24
23,562	1800				1890	147	3.15	2050	160	3.64	2210	173	4.10	2375	185	4.71
24,871	1900							2105	164	4.11	2270	177	4.64	2425	189	5.20
26,180	2000							2162	169	4.64	2330	181	5.20	2475	193	5.72
28,798	2200										2440	190	6.36	2615	204	6.97
31,416	2400										2580	201	7.81	2735	213	8.45
STATIC PRESSURE →		¾″			⅞″			1″			1¼″			1½″		
15,708	1200															
17,017	1300	2390	186	3.24												
18,326	1400	2415	188	3.52	2590	202	4.10	2765	215	4.58						
19,635	1500	2425	189	3.86	2600	203	4.49	2770	216	4.95						
20,944	1600	2455	191	4.24	2620	204	4.82	2776	216	5.38	3090	241	6.50			
22,253	1700	2495	194	4.68	2650	206	5.22	2800	218	5.84	3100	242	6.93			
23,562	1800	2540	198	5.20	2680	209	5.77	2835	221	6 31	3110	242	7.44	3380	263	8.74
24,871	1900	2575	201	5.72	2720	212	6.31	2865	223	6.89	3125	243	8.11	3390	264	9.36
26,180	2000	2620	204	6.24	2770	216	6.89	2900	226	7.51	3165	247	8.86	3420	266	10.0
28,798	2200	2710	211	7.49	2850	222	8.14	2995	233	8.90	3225	251	10.2	3460	269	11 3
31,416	2400	2820	219	9.10	2940	229	9.70	3060	238	10.4	3300	257	11.9	3520	274	13.2
34,034	2600	2930	228	10.8	3060	238	11.5	3155	245	12.2	3385	264	13.7	3580	279	15.2
36,652	2800	3040	237	12.9	3170	247	13.5	3270	254	14.3	3480	271	15.9	3670	286	17.3
39,270	3000				3280	256	15.9	3380	264	16.5	3580	279	18.1	3770	294	19 8
41,888	3200							3510	274	19.0	3700	288	21.0	3880	302	22 6
44,506	3400										3820	297	24.0	3990	311	25 7
47,124	3600													4100	32	29.6
STATIC PRESSURE →		1¾″			2″			2¼″			2½″			3″		
23,562	1800	3660	285	10 2												
26,180	2000	3670	286	11.6	3920	305	13.0									
28,798	2200	3690	287	13.2	3930	306	14.5	4150	323	15.7						
31,416	2400	3750	292	15.2	3960	308	16.1	4175	325	17.9	4390	342	19.8			
34,034	2600	3820	297	16.9	4010	312	18.3	4215	328	19.8	4410	344	22.0	4780	373	25.8
36,652	2800	3885	302	19.4	4080	318	20.6	4275	333	22 3	4450	347	24.1	4830	376	28.2
39,270	3000	3960	308	21.7	4160	324	23.3	4340	338	25.1	4510	352	27 2	4850	378	30.8
41,888	3200	4050	315	24.6	4240	330	26.0	4410	344	28.2	4580	357	30.5	4910	333	33.9
44,506	3400	4150	323	27.7	4336	337	29.3	4485	349	31.4	4660	363	34.0	4990	389	37.5
47,124	3600	4255	332	30.8	4420	344	32.9	4580	357	35.2	4750	370	37.8	5080	396	41 4
49,742	3800	4380	341	35.6	4540	354	37.2	4685	365	39.1	4850	378	41.7	5150	401	45.1
52 360	4000	4550	354	39.5	4660	363	41.8	4820	376	43.7	4950	386	45.8	5240	408	50.0

All published ratings based on air at 70° F. and 29.92″ barometric pressure, and on tests in accordance with N.A.F.M. test code.

TABLE 16

No. 54 SINGLE WIDTH SINGLE INLET FAN — TYPE FC

CIRCUM. = 14.14′ WHEEL DIA. 54″ OUTLET AREA = 15.9 SQ. FT.

STATIC PRESSURE →		1/8"			1/4"			3/8"			1/2"			5/8"		
CFM	OUTLET VEL	Tip Speed	RPM	HP	Tip Speed	RPM	HP	Tip Speed	RPM	HP	Tip Speed	RPM	HP	Tip Speed	RPM	HP
12,720	800	1060	75	.52	1388	98	.83									
14,310	900	1105	78	.62	1418	100	.96	1690	119	1.33						
15,900	1000	1165	82	.81	1450	102	1.15	1710	121	1.52	1960	138	1.97			
17,490	1100	1220	86	.99	1497	106	1.35	1730	122	1.75	1965	139	2.22			
19,080	1200	1290	91	1.19	1530	108	1.60	1760	124	2.03	1980	140	2.45	2195	155	2.96
20,670	1300	1350	95	1.43	1577	112	1.85	1790	127	2.35	2005	142	2.83	2205	156	3.26
22,260	1400	1420	100	1.68	1635	116	2.18	1835	130	2.64	2040	144	3.15	2225	158	3.67
23,850	1500				1690	119	2.50	1885	133	3.01	2080	147	3.58	2255	159	4.15
25,440	1600				1755	124	2.92	1940	137	3.42	2120	150	3.95	2290	162	4.65
27,030	1700				1820	129	3.34	1995	141	3.91	2168	153	4.47	2330	165	5.16
28,620	1800				1890	134	3.84	2050	145	4.43	2210	156	5.00	2375	168	5.88
30,210	1900							2105	149	5.00	2270	160	5.65	2425	171	6.32
31,800	2000							2162	153	5.65	2330	165	6.35	2475	175	6.95
34,980	2200										2440	172	7.75	2615	185	8.48
38,160	2400										2580	182	9.60	2735	193	10.3
STATIC PRESSURE →		3/4"			7/8"			1"			1 1/4"			1 1/2"		
19,080	1200															
20,670	1300	2390	169	3.95												
22,260	1400	2415	171	4.28	2590	183	5.00									
23,850	1500	2425	172	4.71	2600	184	5.46	2770	196	6.03						
25,440	1600	2455	173	5.18	2620	185	5.88	2776	197	6.55	3090	218	7.94			
27,030	1700	2495	176	5.70	2650	187	6.37	2800	198	7.11	3100	219	8.45			
28,620	1800	2540	179	6.35	2680	189	7.00	2835	200	7.68	3110	220	9.08	3380	239	10.6
30,210	1900	2575	182	6.97	2720	192	7.68	2865	202	8.40	3125	221	9.90	3390	240	11.4
31,800	2000	2620	185	7.60	2770	196	8.40	2900	205	9.15	3165	224	10.9	3420	242	12.1
34,980	2200	2710	192	9.10	2850	202	9.90	2995	211	10.8	3225	228	12.4	3460	244	13.8
38,160	2400	2820	199	11.1	2940	208	11.8	3060	216	12.6	3300	233	14.6	3520	248	16.1
41,340	2600	2930	207	13.2	3060	216	14.1	3155	223	14.8	3385	239	16.7	3580	253	18.5
44,520	2800	3040	215	15.7	3170	224	16.4	3270	231	17.5	3480	246	19.4	3670	259	21.2
47,700	3000				3280	232	19.4	3380	239	20.1	3580	254	22.0	3770	266	24.2
50,880	3200							3500	247	23.2	3700	262	25.6	3880	274	27.5
54,060	3400										3820	370	29.3	3990	282	31.3
57,240	3600													4100	290	36.2
STATIC PRESSURE →		1 3/4"			2"			2 1/4"			2 1/2"			3"		
28,620	1800	3660	258	12.4												
31,800	2000	3670	259	14.2	3920	277	15.8									
34,980	2200	3690	261	16.1	3930	278	17.8	4150	293	19.1	4370	309	21.6			
38,160	2400	3750	265	18.6	3960	280	19.7	4175	295	21.8	4390	310	24.0			
41,340	2600	3820	270	20.6	4010	283	22.3	4215	298	24.0	4410	312	26.8	4780	338	31.4
44,520	2800	3885	275	23.7	4080	288	25.1	4275	302	27.1	4450	315	29.3	4830	342	34.3
47,700	3000	3960	280	26.5	4160	294	28.3	4340	307	30.5	4510	319	33.0	4850	343	37.5
50,880	3200	4050	286	29.9	4240	300	31.6	4410	312	34.3	4580	324	37.1	4910	347	41.3
54,060	3400	4150	293	33.7	4336	306	35.8	4485	317	38.2	4660	330	41.3	4990	353	45.5
57,240	3600	4255	301	37.5	4420	313	40.0	4580	324	42.8	4750	336	46.0	5080	358	50.4
60,420	3800	4380	310	43.2	4540	321	45.2	4685	331	47.5	4850	343	50.8	5150	364	55.0
63,600	4000	4550	322	48.1	4660	330	51.0	4820	341	53.2	4950	350	55.8	5240	371	60.8

TABLE 17

No. 60 SINGLE WIDTH SINGLE INLET FAN — TYPE FC

CIRCUM. = 15.71′ WHEEL DIA. 60″ OUTLET AREA = 19.635 SQ. FT.

STATIC PRESSURE →		1/8"			1/4"			3/8"			1/2"			5/8"		
CFM	OUTLET VEL.	Tip Speed	RPM	HP	Tip Speed	RPM	HP	Tip Speed	RPM	HP	Tip Speed	RPM	HP	Tip Speed	RPM	HP
15,708	800	1060	67	.64	1388	88	1.02									
17,672	900	1105	70	.76	1418	90	1.19	1690	107	1.64						
19,635	1000	1165	74	1.00	1450	92	1.42	1710	109	1.87						
21,598	1100	1220	77	1.22	1497	95	1.67	1730	110	2.16	1965	125	2.73			
23,462	1200	1290	82	1.47	1530	97	1.97	1760	112	2.50	1980	126	3.03	2195	139	3.65
25,525	1300	1350	86	1.76	1577	100	2.29	1790	114	2.90	2005	128	3.48	2205	140	4.03
27,489	1400	1420	90	2.08	1635	104	2.68	1835	117	3.25	2040	130	3.88	2225	141	4.53
29,452	1500				1690	107	3.09	1885	120	3.72	2080	132	4.40	2255	143	5.10
31,416	1600				1755	111	3.59	1940	123	4.20	2120	135	4.89	2290	146	5.75
33,380	1700				1820	116	4.12	1995	127	4.82	2168	138	5.52	2330	148	6.38
35,344	1800				1890	120	4.73	2050	130	5.47	2210	141	6.15	2375	151	7.18
37,307	1900							2105	134	6.19	2270	145	6.97	2425	154	7.80
39,270	2000							2162	137	6.98	2330	148	7.80	2475	157	8.60
43,196	2200										2440	155	9.55	2615	166	10.5
46,922	2400										2580	164	11.7	2735	174	12.7
STATIC PRESSURE →		3/4"			7/8"			1"			1 1/4"			1 1/2"		
23,462	1200															
25,525	1300	2390	152	4.86												
27,489	1400	2415	153	5.28												
29,452	1500	2425	154	5.80	2600	165	6.72									
31,416	1600	2455	156	6.36	2620	167	7.25	2776	176	8.06	3090	196	9.77			
33,380	1700	2495	159	7.02	2650	168	7.83	2800	178	8.75	3100	197	10.4			
35,344	1800	2540	161	7.80	2680	170	8.66	2835	180	9.48	3110	198	11.1	3380	215	13.1
37,307	1900	2575	164	8.59	2720	173	9.48	2865	182	10.3	3125	199	12.1	3390	216	14.0
39,270	2000	2620	167	9.36	2770	176	10.3	2900	184	11.3	3165	201	13.4	3420	217	15.0
43,196	2200	2710	172	11.2	2850	181	12.2	2995	190	13.4	3225	205	15.2	3460	220	17.0
46,922	2400	2820	179	13.6	2940	187	14.5	3060	195	15.6	3300	210	17.9	3520	224	19.8
51,050	2600	2930	186	16.2	3060	195	17.4	3155	201	18.3	3385	215	20.6	3580	228	22.8
54,978	2800	3040	193	19.3	3170	202	20.3	3270	208	21.5	3480	221	23.9	3670	233	26.0
58,905	3000				3280	209	23.9	3380	215	24.8	3580	228	27.2	3770	240	29.8
62,832	3200							3500	223	28.5	3700	235	31.5	3880	247	33.8
66,760	3400										3820	243	36.0	3990	254	38.5
70,688	3600													4100	261	44.4
STATIC PRESSURE →		1 3/4"			2"			2 1/4"			2 1/2"			3"		
35,344	1800	3660	233	15.3												
39,270	2000	3670	233	17.5	3920	250	19.5									
43,196	2200	3690	235	19.9	3930	250	21.9	4150	264	23.6	4370	278	26.7			
46,922	2400	3750	238	22.8	3960	252	24.2	4175	266	26.9	4390	279	29.7			
51,050	2600	3820	243	25.5	4010	255	27.5	4215	268	29.7	4410	280	33.1	4780	304	38.8
54,978	2800	3885	247	29.2	4080	259	31.0	4275	272	33.4	4450	283	36.3	4830	307	42.4
58,905	3000	3960	252	32.7	4160	265	35.0	4340	276	37.7	4510	287	40.8	4850	309	46.2
62,832	3200	4050	258	36.9	4240	270	39.0	4410	280	42.4	4580	291	45.8	4910	312	51.0
66,760	3400	4150	264	41.6	4336	276	44.0	4485	285	47.2	4660	296	51.0	4990	317	56.2
70,688	3600	4255	271	46.3	4420	281	49.4	4580	291	52.9	4750	302	58.5	5080	323	62.2
74,614	3800	4380	279	53.5	4540	289	56.0	4685	298	58.8	4850	309	62.7	5150	328	67.9
78,540	4000	4550	289	59.4	4660	296	63.0	4820	307	65.7	4950	315	68.8	5240	333	75.0

All published ratings based on air at 70° F. and 29.92" barometric pressure, and on tests in accordance with N.A.F.M. test code.

FC – SWSI

TABLE 18

No. 66 SINGLE WIDTH SINGLE INLET FAN — TYPE FC

CIRCUM. = 17.28′ WHEEL DIA. 66″ OUTLET AREA = 23.75 SQ. FT.

STATIC PRESSURE →		1/8″			1/4″			3/8″			1/2″			5/8″		
CFM	OUT. VEL.	PV	RPM	HP	PV	RPM	HP	PV	RPM	HP	PV	RPM	HP	PV	RPM	HP
19,000	800	1060	62	.76	1388	80	1.24									
21,375	900	1105	64	.96	1418	82	1.48	1690	98	2.00						
23,750	1000	1165	67	1.20	1450	84	1.76	1710	99	2.28	1960	113	2.96			
26,125	1100	1220	70	1.48	1497	86	2.04	1730	100	2.64	1965	114	3.32	2185	126	4.04
28,500	1200	1290	74	1.80	1530	88	2.40	1760	102	3.04	1980	115	3.72	2195	127	4.48
30,875	1300	1350	78	2.16	1577	91	2.80	1790	104	3.48	2005	116	4.20	2205	128	4.96
33,250	1400	1420	82	2.52	1635	94	3.28	1835	106	4.00	2040	118	4.72	2225	129	5.52
35,625	1500	1500	86	3.24	1690	98	3.76	1885	109	4.48	2080	120	5.36	2255	131	6.20
38,000	1600	1570	90	3.80	1755	102	4.36	1940	112	5.16	2120	122	6.00	2290	133	6.96
40,375	1700				1820	106	5.00	1995	115	5.92	2168	125	6.68	2330	135	7.72
42,750	1800				1890	110	5.76	2050	118	6.68	2210	128	7.52	2375	137	8.56
45,125	1900							2105	122	7.52	2270	131	8.48	2425	140	9.48
47,500	2000							2162	125	8.40	2330	135	9.48	2475	143	10.3
52,250	2200										2440	141	11.7	2615	151	12.6
57,000	2400										2580	150	14.2	2735	158	15.4
STATIC PRESSURE →		3/4″			7/8″			1″			1 1/4″			1 1/2″		
28,500	1200															
30,875	1300	2390	138	5.92												
33,250	1400	2415	140	6.40	2590	150	7.44									
35,625	1500	2425	141	7.04	2600	151	8.12	2770	160	9.00						
38,000	1600	2455	142	7.30	2620	152	8.80	2776	161	9.76	3090	179	11.8			
40,375	1700	2495	144	8.60	2650	153	9.60	2800	162	10.6	3100	180	12.6			
42,750	1800	2540	147	9.48	2680	155	10.6	2835	164	11.5	3110	180	13.6	3380	196	16.0
45,125	1900	2575	149	10.4	2720	158	11.5	2865	166	12.6	3125	181	14.8	3390	196	17.0
47,500	2000	2620	152	11.4	2770	161	12.6	2900	168	13.7	3165	183	16.4	3420	198	18.2
52,250	2200	2710	157	13.7	2850	165	14.9	2995	173	16.2	3225	187	18.4	3460	200	20.8
57,000	2400	2820	163	16.6	2940	170	17.8	3060	177	19.0	3300	191	21.8	3520	203	24.2
61,750	2600	2930	170	19.8	3060	177	21.0	3155	183	22.3	3385	196	25.0	3580	207	27.8
66,500	2800	3040	176	23.0	3170	183	24.8	3270	189	26.2	3480	201	29.0	3670	212	31.6
71,250	3000				3280	190	28.8	3380	195	30.5	3580	207	33.0	3770	218	36.0
76,000	3200							3510	202	35.0	3700	214	38.4	3880	224	41.2
80,750	3400										3820	221	44.0	3990	231	46.4
85,500	3600			7										4100	238	53.6
STATIC PRESSURE →		1 3/4″			2″			2 1/4″			2 1/2″			3″		
42,750	1800	3660	212	18.6												
47,500	2000	3670	213	21.1	3920	227	23.8									
52,250	2200	3690	214	24.0	3930	228	26.6	4150	240	28.8	4370	253	32.4			
57,000	2400	3750	217	27.6	3960	229	29.2	4175	242	32.4	4390	254	36.0			
61,750	2600	3820	221	30.8	4010	232	33.4	4215	244	36.2	4410	255	39.6	4780	277	47.2
66,500	2800	3885	225	35.2	4080	236	37.6	4275	248	40.8	4450	258	43.6	4830	279	51.2
71,250	3000	3960	229	40.0	4160	241	42.8	4340	251	45.6	4510	261	49.6	4850	281	56.0
76,000	3200	4050	235	44.8	4240	246	47.2	4410	255	51.2	4580	265	55.2	4910	284	61.6
80,750	3400	4150	240	50.4	4336	251	53.6	4485	260	57.2	4660	270	61.6	4990	289	68.0
85,500	3600	4255	246	56.0	4420	256	60.0	4580	265	64.0	4750	275	68.8	5080	294	75.2
90,250	3800	4380	254	64.8	4540	263	67.6	4685	271	71.2	4850	281	76.0	5150	298	82.0
95,000	4000	4550	264	71.2	4660	270	76.0	4820	279	79.2	4950	287	84.0	5240	303	90.8

All published ratings based on air at 70° F. and 29.92″ barometric pressure, and on tests in accordance with N.A.F.M. test code.

All published ratings based on air at 70° F. and 29.92" barometric pressure, and on tests in accordance with N.A.F.M. test code.

TABLE 19

No. 8 DOUBLE WIDTH DOUBLE INLET FAN — TYPE FC

CIRCUM. = 2.09′ WHEEL DIA. 8" OUTLET AREA = .637 SQ. FT.

STATIC PRESSURE →		1/8"			1/4"			3/8"			1/2"			5/8"		
CFM	OUTLET VEL.	Tip Speed	RPM	HP	Tip Speed	RPM	HP	Tip Speed	RPM	HP	Tip Speed	RPM	HP	Tip Speed	RPM	HP
510	800	1090	520	.02												
573	900	1142	545	.03	1445	700	.04	1710	816	.06						
637	1000	1200	572	.03	1480	706	.05	1725	823	.07	1970	940	.09			
701	1100	1260	601	.04	1525	727	.06	1765	842	.08	1980	945	.10	2180	1041	.11
764	1200	1322	631	.05	1580	754	.07	1800	859	.09	2005	956	.11	2205	1053	.13
830	1300	1400	668	.06	1635	780	.08	1845	880	.10	2040	972	.12	2240	1070	.15
893	1400	1485	695	.08	1690	806	.09	1890	902	.12	2080	992	.14	2265	1082	.16
955	1500	1530	730	.09	1745	832	.11	1945	928	.13	2120	1011	.16	2300	1099	.18
1020	1600	1598	762	.11	1808	862	.13	1995	952	.15	2180	1040	.17	2350	1122	.20
1083	1700	1674	799	.12	1875	895	.15	2055	980	.17	2230	1065	.19	2395	1145	.22
1146	1800	1745	832	.15	1935	924	.17	2120	1011	.19	2290	1093	.23	2440	1165	.25
1210	1900				2000	955	.19	2180	1041	.22	2340	1119	.24	2490	1190	.27
1274	2000				2075	990	.22	2240	1070	.24	2405	1150	.27	2550	1219	.30
1402	2200							2365	1130	.31	2520	1203	.33	2660	1270	.36
1530	2400							2510	1200	.38	2645	1263	.41	2780	1329	.44
STATIC PRESSURE →		3/4"			7/8"			1"			1 1/4"			1 1/2"		
830	1300	2420	1155	.17												
893	1400	2440	1165	.19	2620	1250	.22									
955	1500	2470	1180	.20	2635	1260	.23	2795	1335	.26						
1020	1600	2505	1198	.23	2655	1269	.26	2810	1341	.29	3120	1490	.36			
1083	1700	2545	1220	.25	2690	1286	.28	2840	1358	.31	3140	1500	.38			
1146	1800	2585	1236	.27	2725	1302	.30	2875	1372	.34	3155	1505	.40	3420	1630	.48
1210	1900	2640	1260	.30	2775	1325	.33	2910	1390	.37	3165	1510	.43	3440	1640	.51
1274	2000	2695	1288	.33	2820	1348	.36	2950	1410	.40	3200	1528	.47	3455	1650	.54
1402	2200	2800	1339	.40	2925	1400	.43	3045	1453	.47	3265	1560	.54	3515	1675	.62
1530	2400	2920	1395	.48	3035	1450	.51	3155	1508	.55	3365	1600	.63	3585	1710	.71
1660	2600	3030	1448	.57	3145	1502	.60	3260	1558	.64	3460	1650	.72	3665	1750	.81
1786	2800	3150	1503	.67	3260	1558	.71	3380	1615	.75	3550	1693	.83	3760	1795	.92
1911	3000	3270	1561	.79	3390	1620	.82	3493	1670	.87	3665	1750	.95	3868	1848	1.05
2040	3200				3520	1680	.96	3620	1730	1.00	3785	1808	1.09	3975	1898	1.20
2166	3400							3745	1790	1.16	3900	1860	1.25	4080	1950	1.34
2292	3600										4030	1925	1.14	4200	2008	1.52
STATIC PRESSURE →		1 3/4"			2"			2 1/4"			2 1/2"			3"		
1274	2000	3710	1765	.62												
1402	2200	3740	1785	.70	3970	1895	.78	4185	2000	.87						
1530	2400	3800	1815	.79	4006	1912	.88	4215	2015	.97	4420	2110	1.06			
1660	2600	3865	1846	.90	4060	1940	.99	4260	2035	1.08	4460	2130	1.18	4850	2315	1.38
1786	2800	3955	1888	1.02	4130	1975	1.11	4335	2070	1.20	4510	2150	1.30	4890	2335	1.51
1911	3000	4050	1935	1.14	4215	2015	1.24	4400	2100	1.34	4585	2190	1.44	4910	2357	1.66
2040	3200	4150	1980	1.29	4310	2060	1.39	4490	2145	1.50	4660	2225	1.60	5000	2385	1.83
2166	3400	4255	2030	1.45	4415	2110	1.56	4575	2185	1.66	4750	2265	1.77	5070	2420	2.00
2292	3600	4360	2085	1.62	4525	2160	1.72	4680	2235	1.85	4840	2315	1.96	5150	2460	2.19
2420	3800	4480	2140	1.82	4640	2215	1.93	4800	2290	2.05	4950	2365	2.16	5250	2500	2.41
2548	4000	4600	2195	2.04	4760	2270	2.15	4910	2345	2.27	5060	2420	2.39	5340	2545	2.65

TABLE 20

No. 10 DOUBLE WIDTH DOUBLE INLET FAN — TYPE FC

CIRCUM. = 2.61′ WHEEL DIA. 10" OUTLET AREA = .985 SQ. FT.

STATIC PRESSURE →		1/8"			1/4"			3/8"			1/2"			5/8"		
CFM	OUTLET VEL.	Tip Speed	RPM	HP	Tip Speed	RPM	HP	Tip Speed	RPM	HP	Tip Speed	RPM	HP	Tip Speed	RPM	HP
788	800	1090	417	.03	1410	539	.06									
886	900	1142	437	.04	1445	553	.07	1710	653	.10						
985	1000	1200	458	.05	1480	566	.08	1725	659	.11	1970	753	.14			
1085	1100	1260	482	.07	1525	583	.09	1765	675	.12	1980	756	.15	2180	833	.19
1180	1200	1322	506	.08	1580	604	.11	1800	688	.14	2005	766	.17	2205	843	.21
1280	1300	1400	535	.10	1635	625	.12	1845	705	.16	2040	780	.19	2240	856	.22
1379	1400	1485	567	.12	1690	646	.14	1890	723	.18	2080	795	.21	2265	865	.25
1477	1500	1530	585	.14	1745	667	.17	1945	743	.20	2120	810	.24	2300	879	.28
1576	1600	1598	610	.16	1808	691	.19	1995	762	.23	2180	833	.27	2350	897	.31
1675	1700	1674	640	.19	1875	716	.23	2055	786	.26	2230	852	.30	2395	915	.34
1773	1800	1745	667	.23	1935	740	.26	2120	810	.29	2290	875	.34	2440	933	.38
1871	1900				2000	764	.30	2180	833	.33	2340	894	.37	2490	952	.42
1970	2000				2075	793	.34	2240	856	.37	2405	919	.42	2550	975	.46
2167	2200							2365	904	.47	2520	963	.52	2660	1017	.57
2364	2400							2510	959	.59	2645	1011	.63	2780	1062	.68
STATIC PRESSURE →		3/4"			7/8"			1"			1 1/4"			1 1/2"		
1280	1300	2420	925	.27												
1379	1400	2440	932	.29	2620	1001	.33									
1477	1500	2470	944	.32	2635	1007	.36	2795	1068	.41						
1576	1600	2505	959	.35	2655	1014	.40	2810	1074	.44	3120	1192	.55			
1675	1700	2545	972	.39	2690	1029	.43	2840	1085	.48	3140	1200	.58			
1773	1800	2585	988	.43	2725	1042	.47	2875	1098	.52	3155	1206	.62	3420	1308	.73
1871	1900	2640	1009	.47	2775	1060	.52	2910	1111	.57	3165	1210	.67	3440	1315	.78
1970	2000	2695	1030	.51	2820	1077	.56	2950	1125	.61	3200	1222	.72	3455	1320	.84
2167	2200	2800	1070	.61	2925	1118	.67	3045	1163	.72	3265	1249	.84	3515	1342	.96
2364	2400	2920	1114	.73	3035	1160	.79	3155	1205	.85	3365	1286	.97	3585	1370	1.09
2561	2600	3030	1158	.87	3145	1202	.93	3260	1247	.99	3460	1318	1.12	3665	1401	1.25
2758	2800	3150	1204	1.04	3260	1246	1.09	3380	1292	1.16	3550	1357	1.28	3760	1438	1.42
2955	3000	3270	1250	1.22	3390	1296	1.27	3493	1335	1.34	3665	1401	1.48	3858	1476	1.63
3152	3200				3520	1345	1.48	3620	1384	1.54	3785	1449	1.69	3975	1519	1.83
3349	3400							3745	1432	1.80	3900	1490	1.93	4080	1560	2.08
3546	3600										4030	1540	2.18	4200	1605	2.36
STATIC PRESSURE →		1 3/4"			2"			2 1/4"			2 1/2"			3"		
1970	2000	3710	1418	.96												
2167	2200	3740	1430	1.08	3970	1515	1.21	4185	1600	1.34						
2364	2400	3800	1452	1.23	4006	1532	1.36	4215	1612	1.50	4420	1690	1.64			
2561	2600	3865	1477	1.38	4060	1552	1.53	4260	1630	1.66	4460	1705	1.81	4850	1854	2.12
2758	2800	3955	1511	1.57	4145	1582	1.71	4335	1655	1.85	4510	1723	2.01	4890	1870	2.33
2955	3000	4050	1549	1.76	4315	1612	1.92	4400	1681	2.07	4585	1751	2.23	4910	1880	2.56
3152	3200	4150	1587	1.98	4350	1647	2.15	4490	1715	2.31	4660	1781	2.47	5000	1910	2.82
3349	3400	4255	1628	2.24	4415	1687	2.40	4575	1750	2.57	4750	1816	2.74	5070	1940	3.09
3546	3600	4360	1666	2.51	4525	1730	2.66	4680	1790	2.86	4840	1850	3.03	5150	1970	3.40
3742	3800	4480	1711	2.81	4640	1772	2.99	4800	1834	3.16	4950	1891	3 35	5250	2005	3.72
3940	4000	4600	1750	3.15	4760	1820	3.33	4910	1876	3.52	5060	1932	3.70	5340	2040	4.10

All published ratings based on air at 70° F. and 29.92" barometric pressure, and on tests in accordance with N.A.F.M. test code.

FC – DWDI

FC – DWDI

TABLE 21

No. 12 DOUBLE WIDTH DOUBLE INLET FAN — TYPE FC

CIRCUM. = 3.14′ WHEEL DIA. 12″ OUTLET AREA = 1.405 SQ. FT.

STATIC PRESSURE →		1/8″			1/4″			3/8″			1/2″			5/8″		
CFM	OUTLET VEL.	Tip Speed	RPM	HP	Tip Speed	RPM	HP	Tip Speed	RPM	HP	Tip Speed	RPM	HP	Tip Speed	RPM	HP
1123	800	1090	349	.05	1410	449	.09									
1265	900	1142	364	.06	1445	460	.10	1710	545	.14						
1405	1000	1200	382	.07	1480	471	.11	1725	550	.15	1970	626	.20			
1545	1100	1260	401	.09	1525	486	.13	1765	562	.17	1980	630	.22	2180	*693	.27
1685	1200	1322	421	.11	1580	504	.15	1800	573	.20	2005	638	.24	2205	701	.29
1827	1300	1400	446	.14	1635	521	.18	1845	588	.22	2040	649	.27	2240	712	.32
1967	1400	1485	463	.17	1690	538	.21	1890	600	.25	2080	661	.31	2265	720	.36
2108	1500	1530	486	.20	1745	556	.24	1945	622	.29	2120	675	.34	2300	731	.40
2248	1600	1598	509	.23	1808	576	.28	1995	635	.33	2180	694	.38	2350	747	.44
2390	1700	1674	533	.27	1875	597	.32	2055	654	.37	2230	710	.43	2395	761	.49
2530	1800	1745	556	.32	1935	616	.37	2120	675	.42	2290	729	.48	2440	775	.54
2670	1900				2000	637	.42	2180	694	.47	2340	745	.53	2490	794	.60
2810	2000				2075	661	.48	2240	713	.53	2405	765	.59	2550	811	.66
3090	2200							2365	753	.67	2520	801	.73	2660	845	.80
3370	2400							2510	798	.84	2645	841	.90	2780	884	.97
STATIC PRESSURE →		3/4″			7/8″			1″			1 1/4″			1 1/2″		
1827	1300	2420	770	.38												
1967	1400	2440	775	.42	2620	833	.48									
2108	1500	2470	785	.46	2635	838	.52	2795	889	.59						
2248	1600	2505	796	.50	2655	844	.56	2810	892	.63	3120	990	.77			
2390	1700	2545	812	.55	2690	856	.62	2840	903	.69	3140	998	.83			
2530	1800	2585	822	.61	2725	866	.67	2875	914	.75	3155	1004	.89	3420	1089	1.05
2670	1900	2640	840	.67	2775	881	.73	2910	925	.81	3165	1010	.96	3440	1093	1.12
2810	2000	2695	856	.73	2820	896	.80	2950	937	.88	3200	1019	1.03	3455	1098	1.19
3090	2200	2800	890	.87	2925	930	.95	3045	969	1.03	3265	1040	1.20	3515	1118	1.36
3370	2400	2920	929	1.04	3035	965	1.13	3155	1000	1.21	3365	1071	1.38	3585	1140	1.56
3655	2600	3030	963	1.25	3145	1000	1.33	3260	1038	1.41	3460	1100	1.59	3665	1166	1.78
3935	2800	3150	1000	1.48	3260	1038	1.56	3380	1075	1.65	3550	1130	1.83	3760	1196	2.03
4220	3000	3270	1040	1.75	3390	1079	1.82	3493	1111	1.92	3665	1166	2.11	3868	1230	2.33
4500	3200				3520	1120	2.12	3620	1150	2.21	3785	1203	2.41	3975	1265	2.62
4775	3400							3745	1192	2.56	3900	1240	2.75	4080	1299	2.96
5060	3600										4030	1280	3.10	4200	1335	3.35
STATIC PRESSURE →		1 3/4″			2″			2 1/4″			2 1/2″			3″		
2810	2000	3710	1175	1.38												
3090	2200	3740	1190	1.54	3970	1263	1.73	4185	1332	1.92						
3370	2400	3800	1210	1.74	4006	1275	1.93	4215	1341	2.13	4920	1408	2.34			
3655	2600	3865	1230	1.97	4060	1293	2.18	4260	1355	2.37	4460	1420	2.59	4850	1545	3.03
3935	2800	3955	1260	2.24	4145	1316	2.44	4335	1379	2.65	4510	1437	2.87	4890	1557	3.33
4220	3000	4050	1290	2.52	4215	1341	2.75	4400	1400	2.96	4585	1460	3.19	4910	1572	3.66
4500	3200	4150	1341	2.84	4350	1372	3.07	4490	1430	3.30	4660	1485	3.53	5000	1590	4.03
4775	3400	4255	1357	3.19	4415	1403	3.43	4575	1457	3.66	4750	1511	3.89	5070	1614	4.41
5060	3600	4360	1389	3.58	4525	1440	3.79	4680	1490	4.08	4840	1540	4.32	5150	1640	4.84
5340	3800	4480	1427	4.01	4640	1477	4.27	4800	1525	4.51	4950	1577	4.79	5250	1670	5.31
5620	4000	4600	1463	4.50	4760	1516	4.74	4910	1561	5.01	5060	1610	5.27	5340	1700	5.84

TABLE 22

No. 15 DOUBLE WIDTH DOUBLE INLET FAN — TYPE FC

CIRCUM. = 3.92′ WHEEL DIA. 15″ OUTLET AREA = 2.18 SQ. FT.

STATIC PRESSURE →		1/8″			1/4″			3/8″			1/2″			5/8″		
CFM	OUTLET VEL.	Tip Speed	RPM	HP	Tip Speed	RPM	HP	Tip Speed	RPM	HP	Tip Speed	RPM	HP	Tip Speed	RPM	HP
1745	800	1090	278	.08	1410	359	.12									
1962	900	1142	292	.09	1445	368	.15	1710	436	.21						
2180	1000	1200	306	.11	1480	378	.18	1725	440	.24	1970	502	.31			
2400	1100	1260	321	.14	1525	389	.20	1765	450	.27	1980	505	.34	2180	556	.42
2618	1200	1322	337	.17	1580	402	.23	1800	459	.30	2005	511	.36	2205	562	.45
2835	1300	1400	357	.22	1635	417	.28	1845	470	.35	2040	520	.42	2240	571	.50
3050	1400	1485	379	.27	1690	431	.32	1890	482	.40	2080	530	.48	2265	578	.56
3270	1500	1530	390	.31	1745	445	.38	1945	495	.44	2120	540	.53	2300	587	.63
3490	1600	1598	407	.36	1808	461	.42	1995	509	.51	2180	556	.59	2350	600	.69
3708	1700	1674	427	.42	1875	478	.50	2055	523	.58	2230	568	.67	2395	611	.77
3925	1800	1745	445	.50	1935	493	.58	2120	540	.65	2290	584	.75	2440	622	.84
4145	1900				2000	510	.65	2180	556	.73	2340	597	.83	2490	635	.94
4360	2000				2075	529	.75	2240	572	.83	2405	614	.92	2550	650	1.03
4800	2200							2365	603	1.05	2520	643	1.14	2660	678	1.25
5235	2400							2510	640	1.31	2645	675	1.40	2780	709	1.50
STATIC PRESSURE →		3/4″			7/8″			1″			1 1/4″			1 1/2″		
2835	1300	2420	617	.59												
3050	1400	2440	622	.65	2620	668	.75									
3270	1500	2470	630	.72	2635	674	.81	2795	713	.92						
3490	1600	2505	639	.79	2655	677	.87	2810	716	.98	3120	796	1.20			
3708	1700	2545	649	.86	2690	686	.97	2840	725	1.08	3140	801	1.30			
3925	1800	2585	660	.94	2725	695	1.05	2875	733	1.17	3155	805	1.39	3420	872	1.64
4145	1900	2640	673	1.04	2775	708	1.14	2910	742	1.26	3165	808	1.50	3440	877	1.75
4360	2000	2695	687	1.14	2820	719	1.26	2950	752	1.38	3200	816	1.61	3455	881	1.86
4800	2200	2800	714	1.36	2925	746	1.48	3045	776	1.61	3265	833	1.87	3515	897	2.12
5235	2400	2920	744	1.62	3035	774	1.76	3155	805	1.89	3365	859	2.15	3585	914	2.43
5670	2600	3030	772	1.95	3145	802	2.07	3260	832	2.20	3460	882	2.48	3665	935	2.78
6100	2800	3150	804	2.30	3260	832	2.43	3380	863	2.57	3550	906	2.85	3760	959	3.16
6540	3000	3270	834	2.73	3390	865	2.84	3493	891	3.00	3665	935	3.30	3868	987	3.48
6980	3200				3520	898	3.30	3620	923	3.45	3785	966	3.76	3975	1015	4.09
7415	3400							3745	955	4.00	3900	995	4.29	4080	1042	4.62
7850	3600										4030	1030	4.83	4200	1072	5.24
STATIC PRESSURE →		1 3/4″			2″			2 1/4″			2 1/2″			3″		
4360	2000	3710	947	2.15												
4800	2200	3740	954	2.40	3970	1013	2.70	4185	1068	3.00						
5235	2400	3800	969	2.71	4006	1022	3.00	4215	1076	3.32	4420	1127	3.65			
5670	2600	3865	986	3.08	4060	1031	3.40	4260	1087	3.70	4460	1138	4.05	4850	1238	4.73
6100	2800	3955	1009	3.50	4145	1057	3.80	4335	1106	4.13	4510	1150	4.48	4890	1248	5 26
6540	3000	4050	1034	3.92	4215	1076	4.13	4400	1123	4.61	4585	1170	4.98	4910	1252	5.76
6980	3200	4150	1059	4.43	4350	1110	4.79	4490	1145	5.14	4660	1183	5.50	5000	1276	6.30
7415	3400	4255	1086	4.98	4415	1126	5.35	4575	1168	5.70	4750	1212	6.07	5070	1293	6.90
7850	3600	4360	1112	5.59	4525	1154	5.90	4680	1194	6.36	4840	1235	6.75	5150	1315	7.55
8290	3800	4480	1142	6.25	4640	1184	6.68	4800	1225	7.04	4950	1264	7.50	5250	1340	8.30
8725	4000	4600	1174	7.00	4760	1215	7.40	4910	1252	7.80	5060	1290	8.25	5340	1365	9.10

All published ratings based on air at 70° F. and 29.92″ barometric pressure, and on tests in accordance with N.A.F.M. test code.

All published ratings based on air at 70° F. and 29.92" barometric pressure, and on tests in accordance with N.A.F.M. test code.

TABLE 23

No. 18 DOUBLE WIDTH DOUBLE INLET FAN — TYPE FC

CIRCUM. = 4.71′ WHEEL DIA. 18″ OUTLET AREA = 3.12 SQ. FT.

STATIC PRESSURE →		1/8"			1/4"			3/8"			1/2"			5/8"		
CFM	OUTLET VEL.	Tip Speed	RPM	HP	Tip Speed	RPM	HP	Tip Speed	RPM	HP	Tip Speed	RPM	HP	Tip Speed	RPM	HP
2,496	800	1090	231	.12	1410	299	.17									
2,808	900	1142	243	.14	1445	307	.21	1710	363	.30						
3,120	1000	1200	255	.16	1480	314	.26	1725	367	.34	1970	418	.44			
3,432	1100	1260	267	.20	1525	324	.29	1765	375	.39	1980	420	.49	2180	463	.60
3,744	1200	1322	281	.25	1580	335	.33	1800	382	.43	2005	426	.52	2205	468	.65
4,056	1300	1400	297	.32	1635	347	.40	1845	392	.50	2040	433	.60	2240	475	.72
4,368	1400	1485	316	.39	1690	359	.46	1890	401	.57	2080	442	.69	2265	481	.81
4,680	1500	1530	325	.45	1745	370	.54	1945	413	.63	2120	450	.76	2300	488	.91
4,992	1600	1598	339	.52	1808	384	.60	1995	424	.73	2180	463	.85	2350	499	1.00
5,304	1700	1674	356	.60	1875	398	.72	2055	436	.83	2230	473	.96	2395	509	1.11
5,616	1800	1745	370	.72	1935	411	.83	2120	450	.93	2290	486	1.08	2440	518	1.21
5,928	1900				2000	425	.94	2180	463	1.05	2340	496	1.19	2490	529	1.35
6,240	2000				2075	441	1.08	2240	475	1.20	2405	511	1.32	2550	541	1.48
6,864	2200							2365	503	1.52	2520	535	1.64	2660	565	1.80
7,488	2400							2510	533	1.88	2645	562	2.00	2780	590	2.15
STATIC PRESSURE →		3/4"			7/8"			1"			1 1/4"			1 1/2"		
4,056	1300	2420	514	.85												
4,368	1400	2440	518	.93	2620	556	1.07									
4,680	1500	2470	525	1.03	2635	560	1.16	2795	593	1.32						
4,992	1600	2505	532	1.13	2655	564	1 25	2810	597	1 41	3120	663	1.72			
5,304	1700	2545	540	1 24	2690	571	1.39	2840	604	1.55	3140	667	1.87			
5,616	1800	2585	549	1.35	2725	578	1.51	2875	610	1.68	3155	670	2.00	3420	726	2.35
5,928	1900	2640	561	1.50	2775	589	1.64	2910	618	1.81	3165	672	2.15	3440	730	2.51
6,240	2000	2695	572	1.64	2820	599	1.80	2950	626	2.12	3200	679	2 30	3455	733	2.68
6,864	2200	2800	595	1.96	2925	621	2.12	3045	647	2.30	3265	693	2.68	3515	746	3.05
7,488	2400	2920	620	2.18	3035	644	2.52	3155	670	2.71	3365	715	3.10	3585	761	3 50
8,112	2600	3030	643	2.80	3145	668	2.97	3260	692	3.16	3460	735	3.56	3665	778	4.00
8,736	2800	3150	669	3 30	3260	692	3 50	3380	718	3.69	3550	754	4.10	3760	798	4.55
9,360	3000	3270	694	3.92	3390	720	4.07	3493	742	4 30	3665	778	4.75	3868	821	5.00
9,984	3200				3520	747	4 73	3620	768	4.95	3785	804	5.40	3975	844	5.75
10,608	3400							3745	795	5.75	3900	828	6.15	4080	866	6.60
11,232	3600										4030	856	6.92	4200	892	7.50
STATIC PRESSURE →		1 3/4"			2"			2 1/4"			2 1/2"			3"		
6,240	2000	3710	790	3.10												
6,864	2200	3740	794	3.45	3970	843	3.88	4185	889	4.30						
7,488	2400	3800	807	3.90	4006	851	4.30	4215	895	4.75	4420	938	5.25			
8,112	2600	3865	820	4.42	4060	862	4.90	4260	904	5.30	4460	947	5.80	4850	1030	6.80
8,736	2800	3955	840	5.00	4145	880	5.45	4335	920	5.94	4510	957	6.45	4890	1037	7.55
9,360	3000	4050	860	5.63	4215	895	5.92	4400	934	6.60	4585	973	7.15	4910	1043	8.30
9,984	3200	4150	881	6.35	4350	923	6.90	4490	953	7.40	4660	989	7.90	5000	1061	9.10
10,608	3400	4255	903	7.15	4415	937	7.70	4575	972	8.20	4750	1008	8.70	5070	1075	9.90
11,232	3600	4360	926	8 00	4525	961	8.50	4680	994	9.15	4840	1027	9.70	5150	1093	10.8
11,856	3800	4480	951	9.00	4640	985	9.60	4800	1019	10.20	4950	1050	10.8	5250	1114	11.9
12.480	4000	4600	976	10.00	4760	1011	10.60	4910	1042	11.2	5060	1073	11.9	5340	1134	13.0

TABLE 24

No. 21 DOUBLE WIDTH DOUBLE INLET FAN — TYPE FC

CIRCUM. = 5.5′ WHEEL DIA. 21″ OUTLET AREA = 4.25 SQ. FT.

STATIC PRESSURE →		1/8"			1/4"			3/8"			1/2"			5/8"		
CFM	OUTLET VEL.	Tip Speed	RPM	HP	Tip Speed	RPM	HP	Tip Speed	RPM	HP	Tip Speed	RPM	HP	Tip Speed	RPM	HP
3,400	800	1090	198	.16	1410	256	.24									
3,825	900	1142	208	.18	1445	262	.29	1710	311	.41						
4,250	1000	1200	218	.21	1480	269	.35	1725	314	.47	1970	358	.61			
4,675	1100	1260	229	.27	1525	277	.39	1765	321	.53	1980	360	.67	2180	396	.82
5,100	1200	1322	240	.33	1580	287	.45	1800	327	.59	2005	365	.71	2205	401	.88
5,525	1300	1400	254	.43	1635	297	.55	1845	335	.69	2040	371	.80	2240	407	.98
5,950	1400	1485	270	.53	1690	308	.63	1890	344	.79	2080	378	.94	2265	412	1.10
6,375	1500	1530	278	.61	1745	317	.75	1945	354	.87	2120	385	1.04	2300	418	1.23
6,800	1600	1598	290	.71	1808	328	.82	1995	363	1.00	2180	396	1.15	2350	428	1.35
7,225	1700	1674	304	.82	1875	341	.98	2055	373	1.13	2230	405	1.31	2395	436	1.50
7,650	1800	1745	317	.98	1935	352	1.13	2120	385	1.27	2290	416	1.47	2440	443	1.64
8,075	1900				2000	364	1.27	2180	396	1.43	2340	425	1.62	2490	453	1.84
8,500	2000				2075	377	1.47	2240	407	1.62	2405	437	1.80	2550	464	2.02
9,350	2200							2365	430	2.06	2520	458	2.22	2660	484	2.45
10,200	2400							2510	456	2.57	2645	481	2.74	2780	506	2.94
STATIC PRESSURE →		3/4"			7/8"			1"			1 1/4"			1 1/2"		
5,525	1300	2420	440	1.15												
5,950	1400	2440	443	1.27	2620	476	1.47									
6,375	1500	2470	449	1.41	2635	479	1.58	2795	508	1.80						
6,800	1600	2505	455	1.55	2655	483	1.70	2810	511	1.92	3120	567	2.35			
7,225	1700	2545	463	1.68	2690	489	1.90	2840	516	2.12	3140	571	2.55			
7,650	1800	2585	470	1.84	2725	495	2.06	2875	523	2.30	3155	574	2.73	3420	622	3.21
8,075	1900	2640	480	2.04	2775	505	2.24	2910	529	2.47	3165	576	2.94	3440	626	3.43
8,500	2000	2695	490	2.24	2820	513	2.47	2950	536	2.70	3200	582	3.16	3455	629	3.64
9,350	2200	2800	509	2.66	2925	532	2.90	3045	554	3.16	3265	594	3.68	3515	639	4.15
10,200	2400	2920	531	3.18	3035	552	3.45	3155	573	3.70	3365	612	4.21	3585	652	4.76
11,050	2600	3030	551	3.82	3145	572	4.06	3260	593	4.30	3460	630	4.85	3665	666	5.45
11,900	2800	3150	573	4.50	3260	593	4.77	3380	615	5.03	3550	645	5.60	3760	684	6.20
12,750	3000	3270	595	5.36	3390	617	5.56	3493	635	5.87	3665	666	6.47	3868	704	6.83
13,600	3200				3520	640	6.50	3620	658	6.80	3785	689	7.37	3975	723	8.00
14,450	3400							3745	681	7.85	3900	710	8.40	4080	742	9.05
15,350	3600										4030	733	9.45	4200	764	10.2
STATIC PRESSURE →		1 3/4"			2"			2 1/4"			2 1/2"			3"		
8,500	2000	3710	675	4.21												
9,350	2200	3740	680	4.70	3970	722	5.29	4185	761	5.87						
10,200	2400	3800	691	5.30	4006	730	5.87	4215	767	6.50	4420	804	7.15			
11,050	2600	3865	703	6.03	4060	738	6.65	4260	775	7.25	4460	811	7.93	4850	882	9.30
11,900	2800	3955	719	6.85	4145	754	7.45	4335	788	8.10	4510	820	8.80	4890	889	10.3
12,750	3000	4050	737	7.65	4215	767	8.10	4400	800	9.05	4585	834	9.75	4910	893	11.3
13,600	3200	4150	755	8.70	4350	791	9.35	4490	818	10.0	4660	847	10.8	5000	910	12.3
14,450	3400	4255	774	9.75	4415	803	10.5	4575	832	11.2	4750	864	11.9	5070	922	13.5
15,350	3600	4360	793	10.9	4525	823	11.5	4680	851	12.4	4840	880	13.2	5150	938	14.8
16,150	3800	4480	816	12.2	4640	844	13.0	4800	873	13.7	4950	900	14.6	5250	955	16.2
17.000	4000	4600	836	13.7	4760	866	14.5	4910	893	15.3	5060	920	16.1	5340	971	17.8

FC – DWDI

FC – DWDI

TABLE 25

No. 24 DOUBLE WIDTH DOUBLE INLET FAN — TYPE FC

CIRCUM. = 6.28′ WHEEL DIA. 24″ OUTLET AREA = 6.228 SQ. FT.

STATIC PRESSURE →		1/8″			1/4″			3/8″			1/2″			5/8″		
CFM	OUTLET VEL.	Tip Speed	RPM	HP	Tip Speed	RPM	HP	Tip Speed	RPM	HP	Tip Speed	RPM	HP	Tip Speed	RPM	HP
4,840	800	1050	167	.20	1385	220	.32									
5,445	900	1090	174	.26	1400	223	.39	1695	270	.52						
6,050	1000	1150	183	.32	1435	228	.46	1700	271	.60						
6,655	1100	1210	193	.39	1470	234	.55	1720	274	.70	1950	310	.90			
7,260	1200	1260	200	.51	1520	242	.66	1755	279	.83	1970	313	1.03	2190	349	1.21
7,865	1300	1340	213	.64	1550	247	.80	1780	283	.96	1990	317	1.17	2200	351	1.37
8,460	1400	1400	223	.78	1610	256	.93	1820	290	1.10	2020	322	1.31	2210	352	1.52
9,065	1500				1670	266	1.07	1870	298	1.26	2055	327	1.48	2240	357	1.71
9,680	1600				1715	273	1.24	1920	306	1.44	2100	334	1.67	2280	363	1.90
10,285	1700				1790	285	1.46	1970	313	1.63	2140	341	1.88	2320	370	2.14
10,890	1800				1850	294	1.67	2030	323	1.88	2180	347	2.12	2360	376	2.37
11,495	1900				1920	306	1.96	2080	331	2.14	2240	356	2.35	2400	382	2.60
12,100	2000				1980	316	2.26	2130	339	2.42	2300	366	2.56	2450	390	2.94
13,310	2200							2270	362	3.06	2420	385	3.33	2540	404	3.56
14,520	2400							2390	381	3.81	2520	401	4.10	2650	422	4.31
STATIC PRESSURE →		3/4″			7/8″			1″			1 1/4″			1 1/2″		
7,260	1200															
7,865	1300	2395	381	1.56												
8,460	1400	2400	382	1.76												
9,065	1500	2420	385	1.96	2585	411	2.19	2760	440	2.45						
9,680	1600	2450	390	2.17	2610	415	2.42	2770	441	2.69						
10,285	1700	2480	395	2.39	2630	419	2.69	2785	443	2.94	3090	492	3.42			
10,890	1800	2520	401	2.62	2660	423	2.94	2800	446	3.20	3100	493	3.75	3390	540	4.32
11,495	1900	2560	407	2.85	2700	430	3.20	2835	451	3.50	3120	497	4.12	3395	541	4.70
12,100	2000	2600	414	3.17	2730	435	3.54	2870	457	3.70	3150	502	4.45	3400	541	4.98
13,310	2200	2685	428	3.86	2820	449	4.17	2940	468	4.41	3205	510	5.16	3440	548	5.84
14,520	2400	2785	443	4.66	2900	462	4.97	3040	484	5.27	3260	519	6.05	3510	559	6.70
15,730	2600	2895	461	5.58	3010	479	5.91	3100	493	6.13	3350	533	6.94	3560	567	7.70
16,920	2800	3010	479	6.68	3120	497	6.98	3220	512	7.40	3450	549	8.01	3640	580	8.90
18,150	3000	3130	499	7.85	3230	514	8.20	3340	532	8.55	3550	565	9.26	3740	594	10.1
19,360	3200	3260	519	9.20	3350	533	9.60	3430	546	9.97	3655	582	10.8	3840	612	11.5
20,570	3400							3580	570	11.7	3760	598	12.3	3940	627	13.2
21,780	3600							3700	589	13.4	3860	615	14.1	4060	646	15.0
STATIC PRESSURE →		1 3/4″			2″			2 1/4″			2 1/2″			3″		
10,890	1800															
12,100	2000	3650	581	5.77												
13,310	2200	3655	582	6.68	3900	621	7.40	4140	660	8.23						
14,520	2400	3720	592	7.57	3940	627	8.26	4150	661	9.07	4380	698	10.1			
15,730	2600	3780	602	8.55	3980	634	9.40	4185	666	10.2	4400	701	11.1	4790	763	12.6
16,920	2800	3845	612	9.62	4040	643	10.5	4240	675	11.4	4420	704	12.2	4800	764	14.1
18,150	3000	3920	624	11.0	4110	655	11.8	4300	685	12.7	4480	713	13.7	4840	771	15.6
19,360	3200	4000	637	12.4	4200	669	13.4	4380	698	14.3	4560	726	15.2	4900	780	17.4
20,570	3400	4120	656	13.9	4280	682	15.1	4460	710	16.0	4640	739	17.1	4960	790	18 8
21,780	3600	4210	670	15.6	4360	694	16.9	4540	723	17.8	4720	752	18.8	5040	803	20.8
22,990	3800				4480	713	18.7	4640	739	19.9	4800	764	20.7	5120	816	22.8
24,200	4000				4600	733	20.5	4740	755	22 0	4900	780	23.0	5200	828	25.2

TABLE 26

No. 27 DOUBLE WIDTH DOUBLE INLET FAN — TYPE FC

CIRCUM. = 7.07′ WHEEL DIA. 27″ OUTLET AREA = 7.50 SQ. FT.

STATIC PRESSURE →		1/8″			1/4″			3/8″			1/2″			5/8″		
CFM	OUTLET VEL.	Tip Speed	RPM	HP	Tip Speed	RPM	HP	Tip Speed	RPM	HP	Tip Speed	RPM	HP	Tip Speed	RPM	HP
6,000	800	1050	148	.26	1385	196	.44									
6,750	900	1090	154	.32	1400	198	.50	1695	240	.66						
7,500	1000	1150	162	.40	1435	203	.59	1700	241	75						
8,250	1100	1210	171	.50	1470	208	.70	1720	244	.90	1950	276	1.12			
9,000	1200	1260	178	.65	1520	215	.83	1755	248	1.06	1970	278	1.30	2190	310	1.54
9,750	1300	1340	189	.81	1550	219	.97	1780	252	1.21	1990	282	1.48	2200	311	1.73
10,500	1400	1400	198	.99	1610	228	1.17	1820	257	1.39	2020	286	1.66	2210	312	1.93
11,250	1500				1670	236	1.35	1870	264	1.60	2055	290	1.87	2240	317	2.16
12,000	1600				1715	243	1.57	1920	272	1.82	2100	297	2.11	2280	322	2.41
12,750	1700				1790	253	1.84	1970	279	2.07	2140	303	2 39	2320	328	2.70
13,500	1800				1850	262	2.11	2030	287	2.37	2180	309	2 68	2360	334	2 99
14,250	1900				1920	272	2.47	2080	294	2.70	2240	317	2.97	2400	339	3 29
15,000	2000				1980	280	2.85	2130	301	3.06	2300	325	3.24	2450	345	3.71
16,500	2200							2270	321	3.87	2420	342	4.20	2540	359	4.50
18,000	2400							2390	338	4.81	2520	356	5.17	2650	375	5.42
STATIC PRESSURE →		3/4″			7/8″			1″			1 1/4″			1 1/2″		
9,000	1200															
9,750	1300	2395	338	2.01												
10,500	1400	2400	339	2.23	2580	365	2.49									
11,250	1500	2420	342	2.47	2585	366	2.77	2760	391	3.10						
12,750	1600	2450	346	2.74	2610	369	3.06	2770	392	3.40						
13,500	1700	2480	351	3.01	2630	372	3.37	2785	394	3.71	3090	437	4.35			
14,250	1800	2520	356	3.31	2660	377	3.69	2800	396	4.05	3100	438	4.75	3390	479	5.52
15,000	1900	2560	362	3.60	2700	382	4.00	2835	401	4.43	3120	441	5.20	3395	480	5.93
16,500	2000	2600	368	4.00	2730	386	4.45	2870	406	4.68	3150	445	5.62	3400	481	6.30
18,000	2200	2685	380	4.88	2820	399	5.27	2940	415	5.58	3205	453	6.52	3440	487	7.38
19,500	2400	2785	394	5.89	2900	410	6.27	3040	430	6.66	3260	461	7.65	3510	496	8.45
21,000	2600	2895	409	7.07	3010	426	7.47	3100	438	7.73	3350	474	8.77	3560	503	9.72
22,500	2800	3010	426	8.43	3120	441	8.82	3220	455	9.35	3450	488	10.1	3640	515	11.2
24,000	3000	3130	445	10.0	3230	456	10 3	3340	473	10.8	3550	502	11.7	3740	529	12.8
25,500	3200	3260	461	11.6	3350	474	12.1	3430	485	12.6	3655	517	13.6	3840	543	14.6
27,000	3400							3580	506	14.8	3760	532	15.5	3940	557	16.6
28,500	3600							3700	523	16.9	3860	546	17.9	4060	574	19.0
STATIC PRESSURE →		1 3/4″			.2″			2 1/4″			2 1/2″			3″		
14,250	1800															
16,500	2000	3650	516	7.29												
18,000	2200	3655	517	8.40	3900	551	9.35	4140	586	10.4						
19,500	2400	3720	526	9.57	3940	557	10.4	4150	587	11.5	4380	620	12.8			
21,000	2600	3780	535	10.8	3980	564	11.9	4185	592	12.9	4400	623	14.1	4790	676	16.3
22,500	2800	3845	544	12.1	4040	572	13.3	4240	600	14.4	4420	626	15.5	4800	679	17.8
24,000	3000	3920	554	13.9	4110	581	14.9	4300	609	16.1	4480	634	17.3	4840	685	19.8
25,500	3200	4000	566	15.7	4200	595	16.9	4380	620	18.1	4560	645	19.3	4900	692	22.0
27,000	3400	4120	583	17.6	4280	606	19.1	4460	631	20.2	4640	656	21.6	4960	702	23.8
28,500	3600	4210	595	19.8	4360	617	21.4	4540	642	22.5	4720	669	23.8	5040	713	26.3
30,000	3800				4480	634	23.6	4640	656	25.2	4800	680	26.1	5120	725	28.8
31,500	4000				4600	651	25.9	4740	670	27.9	4900	692	29.3	5200	735	31.9

All published ratings based on air at 70° F. and 29.92″ barometric pressure, and on tests in accordance with N.A.F.M. test code.

All published ratings based on air at 70° F. and 29.92" barometric pressure, and on tests in accordance with N.A.F.M. test code.

TABLE 27

No. 30 DOUBLE WIDTH DOUBLE INLET FAN — TYPE FC

CIRCUM. = 7.85′ WHEEL DIA. 30" OUTLET AREA = 9.25 SQ. FT.

STATIC PRESSURE →		1/8"			1/4"			3/8"			1/2"			5/8"		
CFM	OUTLET VEL.	Tip Speed	RPM	HP	Tip Speed	RPM	HP	Tip Speed	RPM	HP	Tip Speed	RPM	HP	Tip Speed	RPM	HP
7,400	800	1050	134	.31	1385	176	.51									
8,325	900	1090	139	.40	1400	178	.61									
9,250	1000	1150	147	.50	1435	183	.72	1700	216	.94						
10,175	1100	1210	154	.61	1470	187	.86	1720	219	1.11	1950	248	1.39			
11,100	1200	1260	160	.81	1520	194	1.03	1755	223	1.30	1970	251	1.61	2190	279	1.90
12,025	1300	1340	171	1.00	1550	198	1.19	1780	226	1.50	1990	254	1.83	2200	280	2.14
12,950	1400	1400	178	1.22	1610	205	1.45	1820	232	1.72	2020	257	2.06	2210	281	2.39
13,875	1500				1670	212	1.66	1870	238	1.97	2055	262	2.31	2240	285	2.67
14,800	1600				1715	218	1.94	1920	244	2.25	2100	267	2.61	2280	290	2.93
15,725	1700				1790	228	2.28	1970	251	2.55	2140	272	2.94	2320	295	3.33
16,650	1800				1850	236	2.61	2030	258	2.94	2180	278	3.31	2360	300	3.69
17,575	1900				1920	244	3.05	2080	265	3.33	2240	285	3.67	2400	306	4.06
18,500	2000				1980	252	3.53	2130	272	3.78	2300	293	4.00	2450	312	4.58
20,350	2200							2270	289	4.78	2420	308	5.18	2540	323	5.55
22,200	2400							2390	304	5.94	2520	321	6.38	2650	337	6.72

STATIC PRESSURE →		3/4"			7/8"			1"			1 1/4"			1 1/2"		
11,100	1200															
12,025	1300	2395	305	2.45												
12,950	1400	2400	306	2.75	2580	329	3.10									
13,875	1500	2420	308	3.05	2585	329	3.42	2760	352	3.80						
14,800	1600	2450	312	3.39	2610	333	3.77	2770	353	4.19						
15,925	1700	2480	316	3.72	2630	335	4.17	2785	355	4.58	3090	394	5.40			
16,650	1800	2520	321	4.08	2660	339	4.56	2800	357	5.00	3100	395	5.86	3390	432	6.80
17,575	1900	2560	326	4.44	2700	344	4.94	2835	361	5.47	3120	398	6.41	3395	432	7.33
18,500	2000	2600	331	4.94	2730	348	5.50	2870	366	5.77	3150	401	6.94	3400	433	7.78
20,350	2200	2685	342	6.03	2820	359	6.50	2940	375	6.88	3205	408	8.05	3440	439	9.11
22,200	2400	2785	355	7.28	2900	370	7.75	3040	387	8.22	3260	415	9.44	3510	447	10.5
24,050	2600	2895	369	8.72	3010	384	9.22	3100	395	9.55	3350	427	10.8	3560	454	12.0
25,900	2800	3010	384	10.4	3120	398	10.9	3220	410	11.5	3450	440	12.5	3640	464	13.9
27,750	3000	3130	399	12.3	3230	412	12.8	3340	426	13.3	3550	453	14.4	3740	477	15.8
29,600	3200	3260	415	14.3	3350	427	14.9	3430	437	15.5	3655	465	16.8	3840	489	18.0
31,450	3400							3580	456	18.2	3760	479	19.2	3940	502	20.5
33,300	3600							3700	472	20.9	3860	492	22.1	4060	518	23.4

STATIC PRESSURE →		1 3/4"			2"			2 1/4"			2 1/2"			3"		
16,650	1800															
18,500	2000	3650	465	9.00												
20,350	2200	3655	466	10.3	3900	497	11.5	4140	528	12.8						
22,200	2400	3720	474	11.8	3940	502	12.9	4150	529	14.2	4380	558	15.8			
24,050	2600	3780	482	13.3	3980	507	14.7	4185	533	15.9	4400	560	17.4	4790	610	20.2
25,900	2800	3845	490	15.0	4040	515	16.5	4240	540	17.8	4420	563	19.1	4800	612	22.4
27,750	3000	3920	499	17.1	4110	523	18.4	4300	548	19.8	4480	571	21.3	4840	617	24.7
29,600	3200	4000	510	19.9	4200	535	20.9	4380	558	22.3	4560	580	23.8	4900	624	27.1
31,450	3400	4120	525	21.7	4280	545	23.5	4460	568	25.0	4640	591	26.7	4960	632	29.4
33,300	3600	4210	536	24.4	4360	555	26.4	4540	578	27.5	4720	601	29.4	5040	642	32.5
35,150	3800				4480	571	29.1	4640	591	31.1	4800	612	32.2	5120	652	35.5
37,000	4000				4600	587	31.9	4740	604	34.4	4900	624	36.1	5200	663	39.4

TABLE 28

No. 33 DOUBLE WIDTH DOUBLE INLET FAN — TYPE FC

CIRCUM. = 8.65′ WHEEL DIA. 33" OUTLET AREA = 11.00 SQ. FT.

STATIC PRESSURE →		1/8"			1/4"			3/8"			1/2"			5/8"		
CFM	OUTLET VEL.	Tip Speed	RPM	HP	Tip Speed	RPM	HP	Tip Speed	RPM	HP	Tip Speed	RPM	HP	Tip Speed	RPM	HP
8,800	800	1050	121	.38	1385	160	.60									
9,900	900	1090	126	.48	1400	162	.73	1695	196	.99						
11,000	1000	1150	133	.60	1435	166	.87	1700	197	1.13						
12,100	1100	1210	140	.74	1470	170	1.04	1720	199	1.34	1950	225	1.70			
13,200	1200	1260	146	.97	1520	176	1.24	1755	203	1.58	1970	228	1.95	2190	253	2.35
14,300	1300	1340	155	1.21	1550	179	1.44	1780	206	1.81	1990	230	2.22	2200	254	2.69
15,400	1400	1400	162	1.48	1610	186	1.74	1820	210	2.08	2020	233	2.49	2210	255	2.89
16,500	1500				1670	193	2.02	1870	216	2.39	2055	237	2.79	2240	259	3.23
17,600	1600				1715	198	2.35	1920	222	2.72	2100	243	3.16	2280	263	3.59
18,700	1700				1790	207	2.75	1970	228	3.09	2140	247	3.56	2320	268	4.03
19,800	1800				1850	214	3.16	2030	235	3.56	2180	252	4.00	2360	273	4.47
20,900	1900				1920	222	3.70	2080	240	4.03	2240	259	4.43	2400	277	4.91
22,000	2000				1980	229	4.27	2130	246	4.67	2300	266	4.84	2450	283	5.55
24,200	2200							2270	262	5.78	2420	280	6.27	2540	293	6.72
26,400	2400							2390	276	7.19	2520	291	7.73	2650	306	8.13

STATIC PRESSURE →		3/4"			7/8"			1"			1 1/4"			1 1/2"		
13,200	1200															
14,300	1300	2395	276	2.98												
15,400	1400	2400	277	3.33	2580	298	3.75									
16,500	1500	2420	280	3.69	2585	298	4.13	2760	319	4.60						
17,600	1600	2450	283	4.10	2610	302	4.57	2770	320	5.07						
18,700	1700	2480	286	4.41	2630	304	5.04	2785	322	5.55	3090	357	6.50			
19,800	1800	2520	291	4.94	2660	307	5.51	2800	324	6.05	3100	358	7.10			
20,900	1900	2560	296	5.38	2700	312	5.98	2835	327	6.62	3120	361	7.77	3395	392	8.87
22,000	2000	2600	300	5.98	2730	315	6.66	2870	332	6.99	3150	364	8.40	3400	393	9.42
24,200	2200	2685	310	6.65	2820	326	7.87	2940	340	8.33	3205	370	9.75	3440	398	11.0
26,400	2400	2785	322	7.86	2900	335	9.38	3040	352	9.95	3260	377	11.4	3510	406	12.6
28,600	2600	2895	334	10.6	3010	348	11.2	3100	358	11.6	3350	387	13.1	3560	411	14.5
30,800	2800	3010	348	12.6	3120	361	13.2	3220	372	14.0	3450	399	15.1	3640	420	16.8
33,000	3000	3130	362	14.9	3230	373	15.5	3340	386	16.1	3550	410	17.5	3740	432	19.1
35,200	3200	3260	377	17.4	3350	387	18.0	3430	397	18.8	3655	422	20.3	3840	443	21.9
37,400	3400							3580	414	22.1	3760	434	23.2	3940	456	24.9
39,600	3600							3700	428	25.3	3860	446	26.7	4060	469	28.4

STATIC PRESSURE →		1 3/4"			2"			2 1/4"			2 1/2"			3"		
19,800	1800															
22,000	2000	3650	422	10.9												
24,200	2200	3655	423	12.6	3900	451	14.0	4140	478	15.5						
26,400	2400	3720	430	14.3	3940	456	15.6	4150	480	17.1	4380	506	19.1			
28,600	2600	3780	437	16.1	3980	460	17.7	4185	483	19.3	4400	508	21.7	4790	554	24.5
30,800	2800	3845	444	18.1	4040	467	19.8	4240	490	21.5	4420	511	23.1	4800	555	26.6
33,000	3000	3920	453	20.7	4110	475	22.3	4300	497	24.0	4480	518	25.8	4840	560	29.6
35,200	3200	4000	462	23.4	4200	485	25.3	4380	507	27.1	4560	527	28.8	4900	567	32.4
37,400	3400	4120	476	26.3	4280	495	28.5	4460	515	30.2	4640	536	32.3	4960	573	35.6
39,600	3600	4210	486	29.6	4360	504	31.9	4540	525	33.6	4720	545	35.6	5040	583	39.3
41,800	3800				4480	518	35.3	4640	536	37.7	4800	555	39.0	5120	592	43.0
44,000	4000				4600	532	38.7	4740	547	41.7	4900	567	43.7	5200	601	47.7

All published ratings based on air at 70° F. and 29.92" barometric pressure, and on tests in accordance with N.A.F.M. test code.

FC – DWDI

FC – DWDI

TABLE 29

No. 36 DOUBLE WIDTH DOUBLE INLET FAN — TYPE FC

CIRCUM. = 9.42' WHEEL DIA. 36" OUTLET AREA = 13.1 SQ. FT.

STATIC PRESSURE →		1/8"			1/4"			3/8"			1/2"			5/8"		
CFM	OUTLET VEL.	Tip Speed	RPM	HP	Tip Speed	RPM	HP	Tip Speed	RPM	HP	Tip Speed	RPM	HP	Tip Speed	RPM	HP
10,880	800	1050	111	.45	1385	147	.70									
12,240	900	1090	116	.56	1400	148	.84									
13,600	1000	1150	122	.70	1435	152	1.01	1700	180	1.34						
14,960	1100	1210	128	.85	1470	156	1.20	1720	182	1.56	1950	207	1.96			
16,320	1200	1260	133	1.13	1520	161	1.44	1755	186	1.82	1970	209	2.25	2190	232	2.67
17,680	1300	1340	142	1.40	1550	164	1.67	1780	189	2.10	1990	211	2.56	2200	233	2.99
19,040	1400	1400	148	1.71	1610	171	2.02	1820	193	2.41	2020	214	2.87	2210	234	3.34
20,400	1500				1670	177	2.33	1870	198	2.75	2055	218	3.22	2240	237	3.72
21,760	1600				1715	182	2.72	1920	203	3.14	2100	223	3.65	2280	242	4.15
23,120	1700				1790	190	3.18	1970	209	3.57	2140	227	4.11	2320	246	4.66
24,480	1800				1850	196	3.65	2030	215	4.11	2180	231	4.62	2360	250	5.16
25,840	1900				1920	203	4.27	2080	221	4.66	2240	237	5.12	2400	255	5.66
27,200	2000				1980	210	4.93	2130	226	5.28	2300	244	5.59	2450	260	6.40
29,920	2200							2270	241	6.67	2420	257	7.24	2540	269	7.76
32,640	2400							2390	254	8.30	2520	267	8.92	2650	281	9.39
STATIC PRESSURE →		3/4"			7/8"			1"			1 1/4"			1 1/2"		
16,320	1200															
17,680	1300	2395	254	3.45												
19,040	1400	2400	255	3.84												
20,400	1500	2420	257	4.27	2585	274	4.77	2760	293	5.34						
21,760	1600	2450	260	4.73	2610	277	5.28	2770	294	5.86						
23,120	1700	2480	263	5.20	2630	279	5.82	2785	295	6.40	3090	328	7.51			
24,480	1800	2520	267	5.70	2660	282	6.36	2800	297	6.98	3100	329	8.19			
25,840	1900	2560	271	6.21	2700	286	6.91	2835	301	7.64	3120	331	8.96	3395	360	10.3
27,200	2000	2600	276	6.91	2730	289	7.68	2870	304	8.07	3150	334	9.70	3400	361	10.9
29,200	2200	2685	285	8.42	2820	299	9.08	2940	312	9.62	3205	340	10.3	3440	365	12.7
32,640	2400	2785	295	10.1	2900	307	10.9	3040	322	11.4	3260	346	13.2	3510	372	14.6
35,360	2600	2895	307	12.2	3010	319	12.9	3100	329	13.4	3350	355	15.1	3560	378	16.8
38,080	2800	3010	319	14.6	3120	331	15.4	3220	341	16.1	3450	366	17.5	3640	386	19.4
40,800	3000	3130	332	17.2	3230	343	17.8	3340	354	18.6	3550	377	20.2	3740	397	22.1
43,520	3200	3260	346	19.6	3350	355	20.8	3430	364	21.7	3655	388	23.4	3840	407	25.2
46,240	3400							3580	380	25.4	3760	399	26.8	3940	418	28.7
48,960	3600							3700	392	29.9	3860	410	30.8	4060	431	32.8
STATIC PRESSURE →		1 3/4"			2"			2 1/4"			2 1/2"			3"		
24,480	1800															
27,200	2000	3650	387	12.6												
29,200	2200	3655	388	14.5	3900	414	16.1	4140	439	17.9						
32,640	2400	3720	395	16.5	3940	418	18.0	4150	440	19.8	4380	465	22.0			
35,360	2600	3780	401	18.6	3980	422	20.4	4185	444	22.3	4400	467	24.3	4790	509	28.2
38,080	2800	3845	408	21.0	4040	429	23.0	4240	450	24.8	4420	469	26.7	4800	510	30.7
40,800	3000	3920	416	24.0	4110	436	25.8	4300	456	27.7	4480	476	29.8	4840	514	34.4
43,520	3200	4000	425	27.1	4200	446	29.1	4380	465	31.2	4560	484	33.2	4900	520	37.8
46,240	3400	4120	437	30.4	4280	455	32.9	4460	473	34.9	4640	492	37.2	4960	526	41.1
48,960	3600	4210	447	34.1	4360	463	36.9	4540	482	38.8	4720	501	41.1	5040	535	45.4
51,680	3800				4480	476	40.7	4640	492	43.5	4800	510	45.0	5120	543	49.7
54,400	4000				4600	488	44.6	4740	503	48.1	4900	520	50.4	5200	552	55.1

TABLE 30

No. 40 DOUBLE WIDTH DOUBLE INLET FAN — TYPE FC

CIRCUM. = 10.55' WHEEL DIA. 40¼" OUTLET AREA = 16.40 SQ. FT.

STATIC PRESSURE →		1/8"			1/4"			3/8"			1/2"			5/8"		
CFM	OUTLET VEL.	Tip Speed	RPM	HP	Tip Speed	RPM	HP	Tip Speed	RPM	HP	Tip Speed	RPM	HP	Tip Speed	RPM	HP
13,464	800	1050	100	.57	1385	131	.90									
15,147	900	1090	103	.72	1400	133	1.10									
16,830	1000	1150	109	.86	1435	136	1.23	1700	161	1.66						
18,513	1100	1210	115	1.05	1470	139	1.48	1720	163	1.98	1950	185	2.52			
20,196	1200	1260	119	1.38	1520	144	1.85	1755	166	2.23	1970	187	2.76	2190	208	3.38
21,879	1300	1340	127	1.54	1550	147	2.04	1780	169	2.56	1990	189	3.06	2200	209	3.67
23,562	1400	1400	133	2.09	1610	153	2.47	1820	173	2.94	2020	191	3.53	2210	210	4.09
25,245	1500				1670	158	2.86	1870	177	3.20	2055	195	3.94	2240	212	4.54
26,928	1600				1715	163	3.36	1920	182	3.84	2100	199	4.40	2280	216	5.00
28,611	1700				1790	170	3.88	1970	187	4.37	2140	203	5.03	2320	220	5.69
30,294	1800				1850	175	4.47	2030	192	5.03	2180	207	5.67	2360	224	6.32
31,977	1900				1920	182	5.24	2080	197	5.69	2240	212	6.29	2400	227	6.95
33,660	2000				1980	188	6.05	2130	202	6.31	2300	218	6.85	2450	232	7.86
37,026	2200							2270	215	8.18	2420	229	8.82	2540	241	9.55
40,392	2400							2390	227	10.1	2520	239	10.9	2650	251	11.7
STATIC PRESSURE →		3/4"			7/8"			1"			1 1/4"			1 1/2"		
20,196	1200															
21,879	1300															
23,562	1400	2400	227	4.71												
25,245	1500	2420	229	5.24	2585	245	5.84	2760	262	6.72						
26,928	1600	2450	232	5.80	2610	247	6.46	2770	263	7.08						
28,611	1700	2480	235	6.36	2630	249	7.16	2785	264	7.86	3090	293	9.58			
30,294	1800	2520	239	9.98	2660	252	7.80	2800	265	8.57	3100	294	10.2	3390	321	11.9
31,977	1900	2560	243	7.58	2700	256	8.46	2835	269	9.40	3120	296	11.0	3395	322	12.6
33,660	2000	2600	246	8.45	2730	259	9.48	2870	272	9.84	3150	299	11.9	3400	323	13.3
37,026	2200	2685	255	10.3	2820	267	11.2	2940	279	11.8	3205	304	13.8	3440	326	15.6
40,392	2400	2785	264	12.5	2900	275	13.3	3040	288	14.1	3260	309	16.2	3510	333	18.0
43,758	2600	2895	274	14.9	3010	285	15.8	3100	294	16.4	3350	318	18.5	3560	337	20.5
47,124	2800	3010	285	17.8	3120	296	18.5	3220	305	19.8	3450	327	21.4	3640	345	23.7
50,490	3000	3130	297	21.0	3230	306	21 9	3340	317	22.8	3550	336	24 7	3740	355	27.1
53,856	3200	3260	309	24.4	3350	318	25.5	3430	325	26.7	3655	346	28.8	3840	364	30.9
57,222	3400							3580	339	31.2	3760	356	32.8	3940	373	35.3
60,588	3600							3700	351	35.7	3860	366	37.7	4060	385	40.2
STATIC PRESSURE →		1 3/4"			2"			2 1/4"			2 1/2"			3"		
30,294	1800															
33,660	2000															
37,026	2200	3655	346	17.8	3900	370	19 8	4140	392	21.9						
40,392	2400	3720	352	20.1	3940	373	22.0	4150	393	24.3	4380	415	27.0			
43,758	2600	3780	358	22.8	3980	377	25.1	4185	397	27.2	4400	417	29.7	4790	454	34.6
47,124	2800	3845	364	25.7	4040	383	28.1	4240	402	30.4	4420	419	32.6	4800	455	37 7
50,490	3000	3920	372	29.3	4110	390	31.5	4300	408	34.0	4480	425	36.6	4840	459	41.9
53,856	3200	4000	380	33.2	4200	398	35.5	4380	415	38 1	4560	432	40.5	4900	464	46.4
57,222	3400	4120	391	37.1	4280	406	40 2	4460	423	42.6	4640	440	45.4	4960	470	50.3
60,588	3600	4210	399	42.0	4360	413	44.5	4540	430	47.5	4720	447	50.3	5040	478	55.5
63,954	3800				4480	425	50.0	4640	440	53.1	4800	455	55.1	5120	485	60.8
67,320	4000				4600	436	54.5	4740	449	59.0	4900	464	61.8	5200	493	67.5

All published ratings based on air at 70° F. and 29.92" barometric pressure, and on tests in accordance with N.A.F.M. test code

TABLE 31

No. 44 DOUBLE WIDTH DOUBLE INLET FAN — TYPE FC

CIRCUM. = 11.65′ WHEEL DIA. 44½" OUTLET AREA = 20.00 SQ. FT.

STATIC PRESSURE →		⅛"			¼"			⅜"			½"			⅝"		
CFM	OUTLET VEL.	Tip Speed	RPM	HP	Tip Speed	RPM	HP	Tip Speed	RPM	HP	Tip Speed	RPM	HP	Tip Speed	RPM	HP
16,432	800	1050	90	.70	1385	119	1.10									
18,486	900	1090	94	.88	1400	120	1.33	1695	149	1.81						
20,540	1000	1150	99	1.04	1435	123	1.50	1700	146	2.03						
22,594	1100	1210	104	1.28	1470	126	1.80	1720	148	2.42	1950	167	3.07			
24,648	1200	1260	108	1.68	1520	130	2.26	1755	151	2.72	1970	169	3.36	2190	188	4.13
26,702	1300	1340	115	1.87	1550	133	2.49	1780	153	3.13	1990	171	3.74	2200	189	4.47
28,756	1400	1400	120	2.55	1610	138	3.02	1820	156	3 59	2020	173	4.31	2210	190	4.99
30,810	1500				1670	143	3.49	1870	161	3.90	2055	176	4 81	2240	192	5.55
32,864	1600				1715	147	4.10	1920	165	4.69	2100	180	5.37	2280	196	6.10
34,918	1700				1790	154	4.74	1970	169	5.33	2140	184	6.14	2320	199	6.95
36,972	1800				1850	159	5.45	2030	174	6.14	2180	187	6.90	2360	203	7.71
39,026	1900				1920	165	6.40	2080	179	6.94	2240	192	7 67	2400	206	8.49
41,080	2000				1980	170	7.36	2130	183	7.70	2300	197	8.36	2450	210	9.60
45,188	2200							2270	195	9 97	2420	208	10.7	2540	218	11.7
49,296	2400							2390	205	12 3	2520	216	13 3	2650	227	14.3
STATIC PRESSURE →		¾"			⅞"			1"			1¼"			1½"		
24,648	1200															
26,702	1300															
28,756	1400	2400	206	5.76	2580	221	6.42									
30,810	1500	2420	208	6.40	2585	222	7.13	2760	237	8.20						
32,864	1600	2450	210	7.08	2610	224	7 90	2770	238	8.64						
34,918	1700	2480	213	7.76	2630	226	8.75	2785	239	9.60	3090	265	11.7			
36,972	1800	2520	216	8.53	2660	228	9 51	2800	240	10.4	3100	266	12.5			
39,026	1900	2560	220	9 25	2700	232	10.3	2835	243	11.4	3120	268	13.5	3395	291	15.4
41,080	2000	2600	223	10.3	2730	234	11 6	2870	246	12.0	3150	270	14.5	3400	292	16.2
45,188	2200	2685	230	12.6	2820	242	13.7	2940	252	14.4	3205	275	16.8	3440	295	19.1
49,296	2400	2785	239	15.3	2900	249	16 2	3040	261	17.2	3260	280	19.8	3510	301	21.9
53,404	2600	2895	248	18.2	3010	258	19.3	3100	266	20.0	3350	288	22.6	3560	306	25.0
57,512	2800	3010	258	21.8	3120	268	22.6	3220	276	24.2	3450	296	26.2	3640	312	29.0
61,620	3000	3130	269	25.7	3230	277	26.7	3340	287	27.9	3550	305	30.2	3740	321	33.1
65,728	3200	3260	280	29.9	3350	288	31.1	3430	294	32.6	3655	314	35.2	3840	330	37.7
69,836	3400							3580	307	38.1	3760	323	40.0	3940	338	43.0
73,944	3600							3700	318	43.6	3860	331	46.0	4060	348	49.0
STATIC PRESSURE →		1¾"			2"			2¼"			2½"			3"		
36,972	1800															
41,080	2000	3650	313	18.8												
45,188	2200	3655	314	21.6	3900	335	24.3	4140	355	26.7						
49,296	2400	3720	319	24.6	3940	338	27.0	4150	356	29.6	4380	376	33.0			
53,404	2600	3780	324	27.8	3980	342	30.6	4185	359	33.3	4400	378	36.3	4790	411	42.2
57 512	2800	3845	330	31.4	4040	347	34.4	4240	364	37.2	4420	379	39.8	4800	412	46.0
61,620	3000	3920	336	35.8	4110	353	38.5	4300	369	41.5	4480	385	44.8	4840	415	51.2
65,728	3200	4000	343	40 5	4200	361	43.5	4380	376	46.5	4560	391	49 5	4900	421	56 7
69,836	3400	4120	354	45.2	4280	367	49.1	4460	383	52.1	4640	398	55.5	4960	426	61.4
73,944	3600	4210	361	51.2	4360	374	54.4	4540	390	58.0	4720	405	61.4	5040	433	67.9
78,052	3800				4480	385	61.0	4640	398	64.9	4800	412	67.3	5120	439	74.2
82,160	4000				4600	395	66 6	4740	407	72 1	4900	421	75.5	5200	446	82.3

TABLE 32

No. 49 DOUBLE WIDTH DOUBLE INLET FAN — TYPE FC

CIRCUM. = 12.83′ WHEEL DIA. 49" OUTLET AREA = 24.22 SQ. FT.

STATIC PRESSURE →		⅛"			¼"			⅜"			½"			⅝"		
CFM	OUTLET VEL.	Tip Speed	RPM	HP	Tip Speed	RPM	HP	Tip Speed	RPM	HP	Tip Speed	RPM	HP	Tip Speed	RPM	HP
20,000	800	1050	82	.85	1385	108	1.34									
22,500	900	1090	85	1.06	1400	109	1.62	1695	132	2.18						
25,000	1000	1150	90	1.27	1435	112	1.82	1700	133	2.46						
27,500	1100	1210	94	1.54	1470	115	2.18	1720	134	2.88	1950	152	3.67			
30,000	1200	1260	98	2.02	1520	118	2.61	1755	137	3.08	1970	154	4.07			
32,500	1300	1340	104	2.53	1550	121	3.41	1780	139	3.80	1990	155	4.63	2200	171	5.42
35,000	1400	1400	109	3.08	1610	125	3.73	1820	142	4.35	2020	157	5.18	2210	172	6.01
37,500	1500				1670	130	4.24	1870	146	4.99	2055	160	5.85	2240	175	6.77
40,000	1600				1,715	134	4.90	1920	150	5.70	2100	164	6.61	2280	178	7.52
42,500	1700				1790	139	5.77	1970	154	6.34	2140	167	7.43	2320	181	8.46
45,000	1800				1850	144	6.61	2030	158	7.42	2180	170	8.39	2360	184	9.39
47,500	1900				1920	149	7.75	2080	162	8.47	2240	175	9.30	2400	187	10.3
50,000	2000				1980	154	8.93	2130	166	9.58	2300	179	9.88	2450	191	11.6
55,000	2200							2270	177	12.1	2420	189	13 0	2540	198	14.1
60,000	2400							2390	186	15.0	2520	196	16.2	2650	207	17.0
STATIC PRESSURE →		¾"			⅞"			1"			1¼"			1½"		
30,000	1200															
32,500	1300															
35,000	1400	2400	187	7.01												
37,500	1500	2420	189	7.76	2585	201	8.66	2760	215	9.90						
40,000	1600	2450	191	8.59	2610	203	9.58	2770	216	10.7						
42,500	1700	2480	193	9.45	2630	205	10.7	2785	217	11.7	3090	241	14.1			
45,000	1800	2520	196	10.4	2660	207	11.7	2800	218	12.7	3100	242	15.1	3390	264	17.6
47,500	1900	2560	200	11.3	2700	210	12.7	2835	221	13.8	3120	243	16.3	3395	265	18.6
50,000	2000	2600	203	12.6	2730	213	14.1	2870	224	14.7	3150	246	17.6	3400	265	19.7
55,000	2200	2685	209	15.2	2820	220	16.5	2940	229	17.4	3205	250	20.4	3440	268	23.1
60,000	2400	2785	217	18.4	2900	226	19.7	3040	237	20.8	3260	254	24.0	3510	274	26.5
65,000	2600	2895	226	22.0	3010	235	23.3	3100	242	24.3	3350	261	27.5	3560	277	30.5
70,000	2800	3010	235	26.4	3120	243	27.6	3220	251	29.2	3450	269	31.6	3640	284	35.2
75,000	3000	3130	244	31.0	3230	252	32.5	3340	260	33.8	3550	277	36.6	3740	292	40.0
80,000	3200	3260	254	36.1	3350	261	38.0	3430	267	39.5	3655	285	42.7	3840	299	45.5
85,000	3400							3580	279	46.3	3760	293	48.6	3940	307	52.3
90,000	3600							3700	288	53 0	3860	301	55.8	4060	316	59.3
STATIC PRESSURE →		1¾"			2"			2¼"			2½"			3"		
45,000	1800															
50,000	2000	3650	284	22.8												
55,000	2200	3655	285	26.4	3900	304	29.3									
60,000	2400	3720	290	30.0	3940	307	32.7	4150	323	35.9	4380	341	40.0			
65,000	2600	3780	295	33.8	3980	310	37.2	4185	326	40.4	4400	343	44.1	4790	373	51.0
70,000	2800	3845	300	37.1	4040	315	41.5	4240	330	45.1	4420	345	47.2	4800	374	55.8
75,000	3000	3920	306	43.5	4110	320	46 6	4300	335	50.3	4480	349	54.2	4840	377	61 7
80,000	3200	4000	312	49.0	4200	327	53.0	4380	341	56 5	4560	355	60.1	4900	382	68.8
85,000	3400	4120	321	55.0	4280	334	59.7	4460	348	63.2	4640	362	67.7	4960	387	74.2
90,000	3600	4210	328	61.8	4360	340	66.1	4540	354	70.4	4720	368	74.7	5040	393	82.2
95,000	3800				4480	349	74.0	4640	362	78 7	4800	374	81 9	5120	399	90.0
100,000	4000				4600	359	81.0	4740	369	87.5	4900	382	91 3	5200	405	100.0

FC – DWDI

FC – DWDI

TABLE 33

No. 54 DOUBLE WIDTH DOUBLE INLET FAN — TYPE FC

CIRCUM. = 14.14′ WHEEL DIA. 54″ OUTLET AREA = 2.95 SQ. FT.

STATIC PRESSURE →		1/8″			1/4″			3/8″			1/2″			5/8″		
CFM	OUTLET VEL.	Tip Speed	RPM	HP	Tip Speed	RPM	HP	Tip Speed	RPM	HP	Tip Speed	RPM	HP	Tip Speed	RPM	HP
24,480	800	1050	74	1.03	1385	98	1.63									
27,540	900	1090	77	1.29	1400	99	1.98									
30,600	1000	1150	81	1.56	1435	102	2.24	1700	120	3.00						
33,660	1100	1210	86	1.88	1470	104	2.66	1720	122	3.50	1950	138	4.45			
36,720	1200	1260	89	2.47	1520	107	3.15	1755	124	4.03	1970	139	4.94	2190	155	6.08
39,780	1300	1340	95	3.08	1550	109	3.69	1780	126	4.60	1990	141	5.62	2200	156	6.57
42,840	1400	1400	99	3.76	1610	114	4.45	1820	129	5.28	2020	143	6.31	2210	156	7.33
45,900	1500				1670	118	5.13	1870	132	6.08	2055	145	7.16	2240	158	8.21
48,960	1600				1715	122	5.99	1920	136	6.92	2100	148	8.02	2280	161	9.16
52,020	1700				1790	126	6.99	1970	139	7.87	2140	151	9.06	2320	164	10.3
55,080	1800				1850	131	8.02	2030	143	9.01	2180	154	10.2	2360	167	11.4
59,140	1900				1920	136	9.39	2080	147	10.3	2240	158	11.3	2400	170	12.5
61,200	2000				1980	140	10.8	2130	151	11.6	2300	162	12.4	2450	173	14.1
67,320	2200							2270	160	14.7	2420	171	15.8	2540	180	17.1
73,440	2400							2390	169	18.2	2520	178	19.7	2650	187	20.6
STATIC PRESSURE →		3/4″			7/8″			1″			1 1/4″			1 1/2″		
36,720	1200															
39,780	1300	2395	170	7.79												
42,840	1400	2400	170	8.47	2580	182	9.88									
45,900	1500	2420	171	9.39	2585	183	10.5	2760	195	12.1						
48,960	1600	2450	173	10.5	2610	184	11.6	2770	196	12.9						
52,020	1700	2480	175	11.4	2630	186	12.8	2785	197	14.1	3090	218	17.1			
55,080	1800	2520	178	12.5	2660	188	14.1	2800	198	15.4	3100	219	18.1			
59,140	1900	2560	181	13.7	2700	191	15.2	2835	200	16.8	3120	220	19.8	3395	240	22.5
61,200	2000	2600	184	15.2	2730	193	16.9	2870	203	17.8	3150	222	21.4	3400	240	23.9
67,320	2200	2685	190	18.5	2820	199	20.0	2940	208	21.2	3205	226	24.8	3440	243	28.1
73,440	2400	2785	197	22.4	2900	205	23.8	3040	215	25.3	3260	230	29.1	3510	248	32.1
79,560	2600	2895	204	26.9	3010	213	28.4	3100	219	29.4	3350	237	33.3	3560	252	37.0
85,680	2800	3010	213	32.0	3120	220	33.5	3220	227	35.5	3450	244	38.4	3640	257	42.6
91,800	3000	3130	221	38.0	3230	228	39.1	3340	236	41.0	3550	251	44.5	3740	264	48.6
97,920	3200	3260	230	44.0	3350	237	46.0	3430	242	47.9	3655	259	51.7	3840	272	55.5
104,040	3400							3580	253	56.2	3760	266	58.9	3940	278	63 1
110,160	3600							3700	261	64.2	3860	273	68.0	4060	287	72 2
STATIC PRESSURE →		1 3/4″			2″			2 1/4″			2 1/2″			3″		
55,080	1800															
61,200	2000															
67,320	2200	3655	258	31.9	3900	275	35.5	4140	292	39.5						
73,440	2400	3720	263	36.4	3940	278	39.5	4150	293	43.7	4380	310	48.6			
79,560	2600	3780	267	41.0	3980	282	45.2	4185	296	49.0	4400	311	53.6	4790	338	61.9
85,680	2800	3845	272	46.0	4040	286	50.5	4240	300	54.7	4420	313	58.9	4800	339	67.6
91,800	3000	3920	277	52.8	4110	290	56.6	4300	304	61.2	4480	317	65.7	4840	342	75.2
97,920	3200	4000	283	59.7	4200	297	64.2	4380	310	68.8	4560	322	73.3	4900	346	83.6
104,040	3400	4120	291	66.9	4280	303	72.6	4460	315	76.8	4640	328	82.1	4960	351	90.4
110,160	3600	4210	297	75.2	4360	308	81.3	4540	321	85.5	4720	334	90.4	5040	356	99.8
116,280	3800				4480	317	89.7	4640	328	96.0	4800	340	98.8	5120	362	109.0
122,400	4000				4600	325	98.8	4740	335	106.0	4900	346	111.0	5200	367	122.0

TABLE 34

No. 60 DOUBLE WIDTH DOUBLE INLET FAN — TYPE FC

CIRCUM. = 15.708′ WHEEL DIA. 60″ OUTLET AREA = 36.95 SQ. FT.

STATIC PRESSURE →		1/8″			1/4″			3/8″			1/2″			5/8″		
CFM	OUTLET VEL.	Tip Speed	RPM	HP	Tip Speed	RPM	HP	Tip Speed	RPM	HP	Tip Speed	RPM	HP	Tip Speed	RPM	HP
29,560	800	1050	67	1.26	1385	88	2 00									
33,250	900	1090	69	1.59	1400	89	2.42									
36,950	1000	1150	73	1.90	1435	91	2.75	1700	108	3.69						
40,640	1100	1210	77	2.32	1470	94	3.27	1720	109	4.33	1950	124	5.47			
44,340	1200	1260	80	3.27	1520	97	3.91	1755	111	4.94	1970	125	6.12	2190	139	7.49
48,030	1300	1340	85	3.80	1550	99	4.52	1780	113	5.70	1990	127	6.95	2200	140	8.13
51,730	1400	1400	89	4.64	1610	102	5.51	1820	116	6.54	2020	128	7.83	2210	140	9 08
55,420	1500				1670	106	6.31	1870	119	7.49	2055	131	8.78	2240	142	10 2
59,120	1600				1715	109	7.37	1920	122	8.55	2100	134	9.88	2280	145	11 1
62,810	1700				1790	114	8.66	1970	125	9.69	2140	136	11.2	2320	147	13.0
66,510	1800				1850	118	9.88	2030	129	11.2	2180	139	12.5	2360	150	14 1
70,200	1900				1920	122	11.5	2080	132	12.6	2240	142	14.0	2400	153	15 4
73,900	2000				1980	126	13.4	2130	136	14.3	2300	146	15 2	2450	156	17.4
81,290	2200							2270	144	18.1	2420	154	19.7	2540	162	21 1
88,680	2400							2390	152	22.6	2520	160	24.2	2650	169	25 6
STATIC PRESSURE →		3/4″			7/8″			1″			1 1/4″			1 1/2″		
44,340	1200															
48,030	1300	2395	152	9.60												
51,730	1400	2400	153	10.5	2580	164	12 2									
55,420	1500	2420	154	11.6	2585	164	13.0									
59,120	1600	2450	156	12.9	2610	166	14.3	2770	176	16 0						
62,810	1700	2480	158	14.2	2630	167	15.9	2785	177	17.4	3090	196	21.1			
66,510	1800	2520	160	15.5	2660	169	17.3	2800	178	19 0	3100	197	22.2			
70,200	1900	2560	163	16 9	2700	172	18.8	2835	180	20 8	3120	198	24.3	3395	216	27 8
73,900	2000	2600	165	18.8	2730	174	20 9	2870	183	21.9	3150	200	26.4	3400	217	29.5
81,290	2200	2685	171	22.9	2820	179	24.7	2940	187	26.1	3205	204	30.6	3440	219	34.6
88,680	2400	2785	177	27.6	2900	185	29 5	3040	193	31.3	3260	207	35 9	3510	223	39.9
96,070	2600	2895	184	33.2	3010	186	35.1	3100	197	36 3	3350	213	41 0	3560	226	45.6
103,460	2800	3010	196	39.5	3120	198	41.4	3220	205	43.7	3450	219	47 5	3640	232	52.8
110,850	3000	3130	199	46.7	3230	206	48 6	3340	212	50 5	3550	226	54.7	3740	238	60 0
118,240	3200	3260	207	54 2	3350	213	56.6	3430	218	58 9	3655	232	63.8	3840	244	68.4
125,630	3400							3580	228	69.2	3760	239	73 0	3940	251	77 9
133.020	3600							3700	236	79.4	3860	246	84 0	4060	258	88.9
STATIC PRESSURE →		1 3/4″			2″			2 1/4″			2 1/2″			3″		
66,510	1800	3680	234	29.9												
73,900	2000	3650	232	34.2	3920	249	38.8									
81,290	2200	3655	233	39.1	3900	248	43.7	4140	264	48.6						
88,680	2400	3720	237	44.8	3940	251	49.0	4150	261	54.0	4380	279	60.0			
96,070	2600	3780	240	50.5	3980	253	55.9	4185	266	60.4	4400	280	65.9	4790	305	76.8
103,460	2800	3845	245	57.0	4040	257	62.7	4240	270	67.6	4420	281	72.6	4800	306	83.6
110,850	3000	3920	249	65.0	4110	261	69.9	4300	274	75.2	4480	285	80.9	4840	308	93.9
118,240	3200	4000	255	75.6	4200	267	79.4	4380	279	84.7	4560	290	90.4	4900	312	103.0
125,630	3400	4120	262	82.5	4280	272	89.3	4460	284	95.0	4640	295	102.0	4960	316	112.0
133.020	3600	4210	268	92 7	4360	277	101.0	4540	289	105.0	4720	300	112.0	5040	321	124.0
140,410	3800				4480	285	110.0	4640	295	118.0	4800	306	123 0	5120	326	135.0
147,800	4000				4600	293	122.0	4740	302	131.0	4900	312	137.0	5200	331	150.0

All published ratings based on air at 70° F. and 29.92″ barometric pressure, and on tests in accordance with N.A.F.M. test code.

All published ratings based on air at 70° F. and 29.92" barometric pressure, and on tests in accordance with N.A.F.M. test code.

TABLE 35

No. 66 DOUBLE WIDTH DOUBLE INLET FAN — TYPE FC

CIRCUM. = 17.28' WHEEL DIA. 66" OUTLET AREA = 43.90 SQ. FT.

STATIC PRESSURE →	1/8"			1/4"			3/8"			1/2"			5/8"		
CFM	OUT. VEL.	TS	RPM	HP	PV	RPM	HP	PV	RPM	HP	PV	RPM	HP	PV	RPM	HP
35,120	800	1050	61	1.52	1385	80	2.40									
39,510	900	1090	63	1.92	1400	81	2.92									
43,900	1000	1150	66	2.40	1435	83	3.48	1700	98	4.52						
48,290	1100	1210	70	2.96	1470	85	4.16	1720	99	5.36	1950	113	6.80			
52,680	1200	1260	73	3.88	1520	88	5.00	1755	101	6.32	1970	114	7.80			
57,070	1300	1340	77	4.84	1550	90	5.76	1780	103	7.24	1990	115	8.88	2200	127	10.7
61,460	1400	1400	81	5.92	1610	93	6.96	1820	105	8.32	2020	117	10.0	2210	128	11.6
65,850	1500	1450	84	6.72	1670	96	8.08	1870	108	9.56	2055	119	11.2	2240	130	12.9
70,240	1600	1510	87	7.80	1715	99	9.40	1920	111	10.9	2100	122	12.6	2280	132	14.4
74,630	1700				1790	103	11.0	1970	114	12.4	2140	124	14.2	2320	134	16.1
79,020	1800				1850	107	12.6	2030	117	14.2	2180	126	16.0	2360	137	17.9
83,410	1900				1920	111	14.8	2080	120	16.1	2240	130	17.7	2400	139	19.6
87,800	2000				1980	115	17.1	2130	123	18.7	2300	133	19.4	2450	142	22.2
96,580	2200							2270	131	23.1	2420	140	25.1	2540	147	26.9
105,360	2400							2390	138	28.7	2520	145	30.9	2650	153	32.5

STATIC PRESSURE →	3/4"			7/8"			1"			1 1/4"			1 1/2"		
52,680	1200														
57,070	1300	2395	138	11.9											
61,460	1400	2400	139	13.3	2580	149	15.0								
65,850	1500	2420	140	14.8	2585	150	16.5								
70,240	1600	2450	141	16.4	2610	151	18.3	2770	160	20.3					
74,630	1700	2480	143	17.6	2630	152	20.2	2785	161	22.2					
79,020	1800	2520	145	19.8	2660	154	22.0	2800	162	24.2	3100	179	28.4	3390	196	33.0
83,410	1900	2560	148	21.5	2700	156	23.9	2835	164	26.5	3120	181	31.0	3395	196	35.5
87,800	2000	2600	151	23.9	2730	158	26.6	2870	166	28.0	3150	182	33.6	3400	197	37.7
96,580	2200	2685	155	26.6	2820	163	31.5	2940	170	33.3	3205	185	39.0	3440	199	44.0
105,360	2400	2785	161	31.4	2900	168	37.5	3040	176	39.8	3260	189	45.6	3510	203	50.4
114,140	2600	2895	167	42.4	3010	174	44.8	3100	179	46.4	3350	194	52.4	3560	206	58.0
122,920	2800	3010	174	50.4	3120	181	52.8	3220	186	56.0	3450	200	60.4	3640	210	67.2
131,700	3000	3130	181	59.6	3230	187	62.0	3340	193	64.4	3550	205	70.0	3740	216	76.4
140,480	3200	3260	189	69.6	3350	194	72.0	3430	199	75.2	3655	211	81.2	3840	222	87.6
149,260	3400							3580	207	88.4	3760	217	92.8	3940	228	99.6
158,040	3600							3700	214	101.0	3860	223	107.0	4060	235	114.0

STATIC PRESSURE →	1 3/4"			2"			2 1/4"			2 1/2"			3"		
79,020	1800														
87,800	2000	3650	211	43.6											
96,580	2200	3655	212	50.4	3900	226	56.0	4140	239	62.0						
105,360	2400	3720	215	57.2	3940	228	62.4	4150	240	68.4	4380	253	76.4			
114,140	2600	3780	218	64.4	3980	230	70.8	4185	242	77.2	4400	254	86.8	4790	277	98.0
122,920	2800	3845	222	72.4	4040	234	78.2	4240	245	86.0	4420	256	92.4	4800	278	106.0
131,700	3000	3920	226	82.8	4110	238	89.2	4300	249	96.0	4480	259	103.0	4840	280	118.0
140,480	3200	4000	231	93.6	4200	242	101.0	4380	254	108.0	4560	264	115.0	4900	284	130.0
149,260	3400	4120	238	105.0	4280	247	114.0	4460	258	121.0	4640	268	129.0	4960	288	142.0
158,040	3600	4210	243	118.0	4360	252	128.0	4540	263	134.0	4720	273	142.0	5040	292	157.0
166,820	3800				4480	259	141.0	4640	268	151.0	4800	278	156.0	5120	296	172.0
175,600	4000				4600	266	155.0	4740	274	167.0	4900	284	175.0	5200	301	191.0

All published ratings based on air at 70° F. and 29.92" barometric pressure, and on tests in accordance with N.A.F.M. test code

FC – DWDI

BI – SWSI

TABLE 36

No. 15 SINGLE WIDTH SINGLE INLET FAN — TYPE BI

$$\text{Max. HP} = .195 \left(\frac{\text{RPM}}{1000}\right)^3$$

CIRCUM. = 3.93′ WHEEL DIA. 15″ OUTLET AREA = 1.23 SQ. FT.

STATIC PRESSURE →		1/8″			1/4″			3/8″			1/2″			5/8″		
CFM	OUTLET VEL.	Tip Speed	RPM	HP	Tip Speed	RPM	HP	Tip Speed	RPM	HP	Tip Speed	RPM	HP	Tip Speed	RPM	HP
738	600	2075	528	.03	2455	625	.04	2825	719	.06	3185	810	.08	3515	894	.11
861	700	2325	591	.04	2640	672	.06	2960	753	.08	3290	848	.10	3590	913	.13
984	800	2540	646	.05	2865	729	.08	3110	791	.10	3440	875	.12	3675	935	.15
1107	900	2790	710	.06	3080	784	.09	3330	847	.12	3580	910	.14	3835	976	.17
1230	1000	3030	771	.07	3270	832	.11	3545	902	.14	3760	957	.17	3980	1013	.20
1363	1100				3510	893	.14	3750	954	.17	3950	1005	.20	4170	1061	.23
1476	1200				3770	960	.16	3970	1010	.20	4170	1061	.23	4375	1113	.27
1599	1300							4200	1069	.23	4390	1117	.27	4585	1167	.31
1722	1400							4420	1124	.27	4620	1176	.31	4800	1222	.35
1845	1500										4850	1234	.35	5020	1277	.40
1968	1600										5080	1293	.40	5260	1356	.45
2091	1700													5500	1400	.50
2214	1800													5740	1460	.56
STATIC PRESSURE →		3/4″			7/8″			1″			1 1/4″			1 1/2″		
984	800	3950	1005	.18	4220	1074	.20	4480	1140	.23	4940	1257	.29	5370	1366	.36
1107	900	4070	1036	.20	4320	1100	.23	4530	1153	.26	5000	1272	.32	5415	1378	.39
1230	1000	4200	1069	.23	4450	1127	.26	4650	1183	.28	5075	1291	.35	5510	1402	.43
1363	1100	4375	1113	.26	4590	1168	.29	4770	1214	.32	5170	1316	.39	5580	1420	.47
1476	1200	4560	1160	.30	4740	1206	.33	4910	1249	.37	5300	1349	.44	5650	1438	.52
1599	1300	4720	1200	.34	4910	1249	.37	5080	1293	.41	5445	1385	.49	5800	1475	.57
1722	1400	4960	1262	.39	5120	1303	.42	5260	1356	.46	5600	1425	.54	5930	1509	.63
1845	1500	5170	1316	.44	5320	1354	.48	5480	1395	.52	5780	1471	.60	6080	1547	.69
1968	1600	5390	1372	.49	5520	1404	.54	5700	1450	.58	5975	1520	.67	6220	1583	.76
2091	1700	5600	1425	.54	5750	1464	.60	5920	1506	.65	6190	1576	.74	6435	1637	.83
2214	1800	5830	1483	.60	5990	1525	.67	6140	1562	.72	6420	1634	.83	6640	1690	.92
2337	1900	6080	1547	.68	6250	1590	.74	6360	1618	.80	6645	1691	.90	6830	1738	1.01
2460	2000	6320	1608	.75	6430	1636	.81	6550	1667	.88	6840	1740	1.00	7090	1804	1.11
STATIC PRESSURE →		1 3/4″			2″			2 1/4″			2 1/2″			3″		
1230	1000	5890	1499	.51	6240	1588	.59	6600	1679	.67	6910	1758	.75	7530	1916	.93
1363	1100	5950	1514	.55	6290	1601	.64	6660	1695	.72	6970	1774	.81	7570	1926	.98
1476	1200	6020	1532	.60	6390	1626	.69	6720	1710	.78	7030	1789	.87	7630	1941	1.04
1599	1300	6120	1557	.66	6480	1648	.74	6800	1730	.83	7100	1807	.93	7695	1958	1.11
1722	1400	6260	1592	.72	6580	1674	.81	6880	1751	.90	7180	1827	.99	7760	1975	1.19
1845	1500	6420	1634	.79	6720	1710	.88	6960	1771	.98	7260	1847	1.08	7825	1991	1.27
1968	1600	6570	1672	.86	6870	1750	.95	7110	1809	1.04	7350	1870	1.16	7900	2010	1.36
2091	1700	6720	1709	.94	7000	1780	1.04	7270	1852	1.15	7520	1913	1.25	7990	2033	1.47
2214	1800	6885	1752	1.02	7160	1817	1.13	7430	1890	1.24	7670	1952	1.34	8140	2071	1.57
2337	1900	7080	1802	1.11	7320	1863	1.23	7570	1926	1.34	7820	1990	1.45	8290	2110	1.67
2460	2000	7310	1861	1.22	7520	1913	1.33	7750	1972	1.45	7970	2030	1.56	8405	2139	1.79
2706	2200	7740	1970	1.44	7900	2010	1.56	8200	2087	1.70	8345	2123	1.82	8750	2226	2.03
2952	2400	8120	2066	1.66	8350	2124	1.80	8580	2183	1.94	8745	2225	2.09	9115	2319	2.24

TABLE 37

No. 18 SINGLE WIDTH SINGLE INLET FAN — TYPE BI

$$\text{Max. HP} = .48 \left(\frac{\text{RPM}}{1000}\right)^3$$

CIRCUM. = 4.71′ WHEEL DIA 18″ OUTLET AREA = 1.77 SQ. FT.

STATIC PRESSURE →		1/8″			1/4″			3/8″			1/2″			5/8″		
CFM	OUTLET VEL.	Tip Speed	RPM	HP	Tip Speed	RPM	HP	Tip Speed	RPM	HP	Tip Speed	RPM	HP	Tip Speed	RPM	HP
1062	600	2075	441	.03	2455	521	.06	2825	600	.09	3185	676	.12	3515	746	.16
1239	700	2325	493	.05	2640	561	.08	2960	628	.11	3290	698	.14	3590	762	.18
1416	800	2540	539	.07	2865	608	.11	3110	660	.14	3440	730	.17	3675	780	.21
1593	900	2790	592	.09	3080	654	.13	3330	707	.17	3580	760	.20	3835	815	.24
1770	1000	3030	642	.11	3270	694	.16	3545	754	.20	3760	798	.24	3980	845	.28
1947	1100				3510	746	.20	3750	796	.24	3950	839	.28	4170	885	.33
2124	1200				3770	800	.23	3970	843	.28	4170	885	.33	4375	929	.38
2301	1300							4200	892	.33	4390	932	.38	4585	974	.44
2478	1400							4420	938	.38	4620	981	.44	4800	1020	.50
2655	1500										4850	1030	.50	5020	1066	.56
2832	1600										5080	1078	.57	5260	1131	.63
3009	1700													5500	1167	.71
3188	1800													5740	1218	.80
STATIC PRESSURE →		3/4″			7/8″			1″			1 1/4″			1 1/2″		
1416	800	3950	839	.24	4220	896	.28	4480	951	.33	4940	1049	.42	5370	1140	.51
1593	900	4070	864	.28	4320	917	.33	4530	962	.37	5000	1062	.46	5415	1150	.56
1770	1000	4200	891	.32	4450	944	.37	4650	987	.41	5075	1077	.51	5510	1170	.61
1947	1100	4375	929	.37	4590	975	.42	4770	1012	.46	5170	1098	.56	5580	1185	.67
2124	1200	4560	968	.43	4740	1006	.47	4910	1042	.52	5300	1125	.63	5650	1200	.74
2301	1300	4720	1002	.49	4910	1042	.53	5080	1078	.59	5445	1156	.70	5800	1232	.82
2478	1400	4960	1053	.56	5120	1087	.61	5260	1131	.66	5600	1189	.78	5930	1259	.90
2655	1500	5170	1098	.63	5320	1130	.69	5480	1163	.74	5780	1227	.86	6080	1290	.99
2832	1600	5390	1144	.70	5520	1172	.77	5700	1210	.83	5975	1269	.96	6220	1321	1.09
3009	1700	5600	1189	.78	5750	1220	.86	5920	1257	.93	6190	1314	1.07	6435	1366	1.20
3188	1800	5830	1238	.87	5990	1272	.95	6140	1303	1.04	6420	1363	1.19	6640	1410	1.32
3363	1900	6080	1290	.97	6250	1327	1.06	6360	1350	1.15	6645	1411	1.30	6830	1450	1.45
3540	2000	6320	1342	1.08	6430	1365	1.17	6550	1390	1.27	6840	1452	1.43	7090	1505	1.60
STATIC PRESSURE →		1 3/4″			2″			2 1/4″			2 1/2″			3″		
1770	1000	5890	1251	.72	6240	1325	.84	6600	1401	.96	6910	1467	1.08	7530	1599	1.33
1947	1100	5950	1263	.79	6290	1335	.92	6660	1414	1.03	6970	1480	1.16	7570	1607	1.41
2124	1200	6020	1278	.86	6390	1356	.99	6720	1427	1.12	7030	1493	1.25	7630	1620	1.50
2301	1300	6120	1299	.94	6488	1376	1.07	6800	1444	1.20	7100	1507	1.33	7695	1634	1.60
2478	1400	6260	1329	1.03	6580	1397	1.16	6880	1461	1.29	7180	1524	1.43	7760	1648	1.71
2655	1500	6420	1363	1.13	6720	1427	1.27	6960	1478	1.40	7260	1541	1.55	7825	1661	1.83
2832	1600	6570	1394	1.23	6870	1459	1.37	7110	1509	1.50	7350	1561	1.67	7900	1677	1.97
3009	1700	6720	1427	1.34	7000	1486	1.49	7270	1543	1.64	7520	1597	1.80	7990	1696	2.11
3188	1800	6885	1462	1.47	7160	1519	1.62	7430	1575	1.78	7670	1628	1.93	8140	1729	2.25
3363	1900	7080	1503	1.60	7320	1554	1.77	7570	1607	1.92	7820	1660	2.08	8290	1760	2.40
3540	2000	7310	1552	1.76	7520	1597	1.92	7750	1645	2.08	7970	1692	2.24	8405	1785	2.56
3894	2200	7740	1643	2.08	7900	1677	2.25	8200	1741	2.44	8345	1772	2.62	8750	1858	2.92
4248	2400	8120	1724	2.40	8350	1773	2.60	8580	1822	2.80	8745	1857	3.00	9115	1935	3.36

All published ratings based on air at 70° F. and 29.92″ barometric pressure, and on tests in accordance with N.A.F.M. test code.

TABLE 38

No. 21 SINGLE WIDTH SINGLE INLET FAN — TYPE BI

$$\text{Max. HP} = 1.05\left(\frac{\text{RPM}}{1000}\right)^3$$

CIRCUM. = 5.5′ WHEEL DIA. 21″ OUTLET AREA = 2.4 SQ. FT.

STATIC PRESSURE →		1/8"			1/4"			3/8"			1/2"			5/8"		
CFM	OUTLET VEL.	Tip Speed	RPM	HP	Tip Speed	RPM	HP	Tip Speed	RPM	HP	Tip Speed	RPM	HP	Tip Speed	RPM	HP
1440	600	2075	377	.04	2455	446	.08	2825	514	.12	3185	579	.16	3515	639	.22
1680	700	2325	422	.07	2640	480	.11	2960	538	.15	3290	598	.20	3590	653	.25
1920	800	2540	462	.10	2865	521	.15	3110	565	.19	3440	625	.23	3675	668	.29
2160	900	2790	507	.12	3080	560	.18	3330	605	.23	3580	651	.27	3835	698	.33
2400	1000	3030	551	.15	3270	595	.22	3545	644	.27	3760	684	.33	3980	724	.38
2640	1100				3510	638	.27	3750	682	.33	3950	718	.38	4170	758	.45
2880	1200				3770	685	.31	3970	722	.38	4170	758	.45	4375	795	.52
3120	1300							4200	764	.45	4390	798	.52	4585	834	.60
3360	1400							4420	804	.52	4620	840	.60	4800	873	.68
3600	1500										4850	882	.68	5020	913	.76
3840	1600										5080	924	.78	5260	955	.86
4080	1700													5500	1000	.97
4320	1800													5740	1044	1.09
STATIC PRESSURE →		3/4"			7/8"			1"			1 1/4"			1 1/2"		
1920	800	3950	718	.33	4220	767	.38	4480	815	.45	4940	898	.57	5370	976	.69
2160	900	4070	740	.38	4320	785	.45	4530	824	.50	5000	909	.63	5415	985	.76
2400	1000	4200	764	.44	4450	809	.50	4650	846	.56	5075	923	.69	5510	1002	.83
2640	1100	4375	795	.50	4590	835	.57	4770	867	.64	5170	940	.76	5580	1015	.91
2880	1200	4560	829	.58	4740	862	.64	4910	893	.72	5300	964	.86	5650	1027	1.01
3120	1300	4720	858	.67	4910	892	.72	5080	923	.80	5445	990	.95	5800	1055	1.12
3360	1400	4960	902	.76	5120	930	.83	5260	955	.90	5600	1019	1.06	5930	1078	1.23
3600	1500	5170	940	.86	5320	968	.94	5480	996	1.01	5708	1051	1.17	6080	1105	1.35
3840	1600	5390	980	.95	5520	1004	1.05	5700	1037	1.13	5975	1086	1.31	6220	1131	1.48
4080	1700	5600	1018	1.06	5750	1046	1.17	5920	1077	1.27	6190	1125	1.46	6435	1170	1.63
4320	1800	5830	1060	1.18	5990	1090	1.31	6140	1116	1.42	6420	1167	1.62	6640	1207	1.80
4560	1900	6080	1105	1.32	6250	1137	1.44	6360	1156	1.57	6645	1208	1.77	6830	1241	1.97
4800	2000	6320	1149	1.47	6430	1169	1.58	6550	1191	1.73	6840	1244	1.95	7090	1289	2.18
STATIC PRESSURE →		1 3/4"			2"			2 1/4"			2 1/2"			3"		
2400	1000	5890	1071	.98	6240	1135	1.14	6600	1200	1.31	6910	1256	1.47	7530	1369	1.81
2640	1100	5950	1082	1.07	6290	1144	1.25	6660	1211	1.40	6970	1267	1.58	7570	1376	1.92
2880	1200	6020	1095	1.17	6390	1162	1.35	6720	1222	1.52	7030	1278	1.70	7630	1387	2.04
3120	1300	6120	1113	1.28	6480	1178	1.46	6800	1236	1.62	7100	1291	1.81	7695	1399	2.18
3360	1400	6260	1139	1.40	6580	1196	1.58	6880	1251	1.76	7180	1305	1.95	7760	1411	2.33
3600	1500	6420	1167	1.54	6720	1222	1.73	6960	1265	1.90	7260	1320	2.11	7825	1423	2.49
3840	1600	6570	1194	1.68	6870	1249	1.87	7110	1293	2.04	7350	1336	2.27	7900	1436	2.68
4080	1700	6720	1222	1.84	7000	1272	2.04	7270	1322	2.24	7520	1367	2.45	7990	1453	2.87
4320	1800	6885	1252	2.00	7160	1301	22.1	7430	1350	2.42	7670	1394	2.63	8140	1480	3.07
4560	1900	7080	1288	2.18	7320	1331	2.41	7570	1376	2.61	7820	1422	2.83	8290	1507	3.27
4800	2000	7310	1329	2.39	7520	1367	2.61	7750	1409	2.83	7970	1449	3.05	8405	1528	3.51
5280	2200	7740	1407	2.83	7900	1436	3.06	8200	1491	3.32	8345	1517	3.57	8750	1591	3.98
5760	2400	8120	1477	3.27	8350	1518	3.54	8580	1560	3.81	8745	1590	4.08	9115	1657	4.57

TABLE 39

No. 24 SINGLE WIDTH SINGLE INLET FAN — TYPE BI

$$\text{Max. HP} = 2.05\left(\frac{\text{RPM}}{1000}\right)^3$$

CIRCUM. = 6.283′ WHEEL DIA. 24″ OUTLET AREA = 3.142 SQ. FT.

STATIC PRESSURE →		1/8"			1/4"			3/8"			1/2"			5/8"		
CFM	OUTLET VEL.	Tip Speed	RPM	HP	Tip Speed	RPM	HP	Tip Speed	RPM	HP	Tip Speed	RPM	HP	Tip Speed	RPM	HP
1885	600	2025	322	.06	2430	386	.11	2825	450	.16	3185	508	.21	3515	560	.27
2200	700	2200	350	.09	2562	408	.13	2930	466	.19	3275	521	.24	3590	571	.31
2514	800	2380	379	.12	2755	438	.17	3050	486	.23	3375	537	.28	3675	585	.35
2828	900	2590	412	.15	2950	470	.21	3217	512	.27	3500	557	.33	3780	602	.40
3142	1000	2830	450	.18	3130	498	.25	3430	546	.32	3650	581	.39	3900	621	.46
3456	1100				3310	526	.29	3590	572	.38	3825	609	.46	4050	644	.53
3770	1200				3540	563	.36	3790	603	.44	4050	644	.53	4225	672	.61
4085	1300							3990	635	.52	4220	671	.61	4440	707	.70
4399	1400							4200	668	.60	4420	703	.70	4630	737	.80
4713	1500										4600	732	.79	4800	764	.90
5027	1600										4750	756	.88	4950	788	1.00
5342	1700													5200	828	1.14
5656	1800													5400	860	1.28
STATIC PRESSURE →		3/4"			7/8"			1"			1 1/4"			1 1/2"		
2514	800	3950	629	.42	4220	671	.49	4480	714	.56	4940	787	.72	5370	854	.90
2828	900	4050	644	.47	4290	683	.55	4530	721	.63	5000	796	.80	5415	862	.98
3142	1000	4160	662	.53	4400	700	.62	4630	737	.70	5075	808	.88	5510	878	1.07
3456	1100	4290	683	.60	4520	719	.69	4750	756	.78	5170	823	.96	5580	888	1.16
3770	1200	4425	704	.69	4650	740	.78	4860	774	.87	5260	837	1.06	5650	899	1.26
4085	1300	4550	724	.79	4780	761	.88	4990	794	.97	5390	858	1.16	5750	915	1.37
4399	1400	4800	764	.90	4980	793	1.00	5125	816	1.08	5520	879	1.27	5860	933	1.50
4713	1500	4970	792	1.01	5180	825	1.12	5350	851	1.21	5640	898	1.41	5970	950	1.64
5027	1600	5160	822	1.13	5380	856	1.25	5510	877	1.35	5800	924	1.57	6100	971	1.79
5342	1700	5350	851	1.25	5540	882	1.37	5700	908	1.51	5990	955	1.74	6250	994	1.96
5656	1800	5550	883	1.38	5710	910	1.52	5900	940	1.66	6200	987	1.92	6435	1024	2.17
5971	1900	5750	915	1.53	5920	943	1.67	6080	968	1.82	6390	1017	2.10	6615	1053	2.35
6285	2000	5950	947	1.71	6080	968	1.82	6260	996	2.00	6560	1044	2.28	6860	1092	2.60
STATIC PRESSURE →		1 3/4"			2"			2 1/4"			2 1/2"			3"		
3142	1000	5890	938	1.24	6240	993	1.44	6600	1050	1.65	6910	1100	1.87	7530	1198	2.30
3456	1100	5950	947	1.36	6290	1001	1.56	6660	1060	1.76	6970	1109	2.00	7570	1205	2.46
3770	1200	6020	958	1.47	6370	1014	1.68	6720	1070	1.91	7030	1119	2.14	7630	1215	2.62
4085	1300	6110	973	1.59	6455	1027	1.80	6800	1082	2.05	7100	1130	2.29	7695	1225	2.78
4399	1400	6200	987	1.72	6550	1042	1.95	6880	1095	2.20	7180	1143	2.46	7760	1235	2.96
4713	1500	6330	1008	1.86	6635	1056	2.11	6960	1107	2.36	7260	1155	2.61	7825	1246	3.15
5027	1600	6450	1027	2.01	6750	1074	2.28	7050	1122	2.54	7350	1170	2.80	7900	1257	3.35
5342	1700	6575	1047	2.19	6865	1093	2.45	7180	1143	2.72	7450	1185	3.00	7990	1270	3.56
5656	1800	6720	1070	2.40	7000	1114	2.65	7290	1160	2.91	7560	1203	3.20	8100	1288	3.79
5971	1900	6860	1092	2.61	7140	1136	2.86	7400	1178	3.14	7680	1222	3.41	8200	1305	4.03
6285	2000	7080	1127	2.86	7300	1162	3.12	7560	1203	3.40	7800	1241	3.67	8320	1325	4.28
6912	2200	7450	1185	3.33	7650	1217	3.64	7920	1261	3.95	8100	1288	4.25	8580	1366	4.86
7540	2400	7800	1241	3.83	8100	1288	4.20	8250	1312	4.58	8450	1344	4.90	8850	1408	5.55

All published ratings based on air at 70° F. and 29.92" barometric pressure, and on tests in accordance with N.A.F.M. test code

BI – SWSI

BI – SWSI

TABLE 40

No. 27 SINGLE WIDTH SINGLE INLET FAN — TYPE BI

$$\text{Max. HP} = 3.70 \left(\frac{\text{RPM}}{1000}\right)^3$$

CIRCUM. = 7.07′ WHEEL DIA. 27″ OUTLET AREA = 3.97 SQ. FT.

STATIC PRESSURE →		1/8″			1/4″			3/8″			1/2″			5/8″		
CFM	OUTLET VEL.	Tip Speed	RPM	HP	Tip Speed	RPM	HP	Tip Speed	RPM	HP	Tip Speed	RPM	HP	Tip Speed	RPM	HP
2385	600	2025	286	.08	2430	344	.14	2825	400	.20	3185	450	.27	3515	497	.34
2783	700	2200	311	.11	2562	362	.17	2930	414	.24	3275	463	.31	3590	508	.39
3181	800	2380	337	.15	2755	390	.21	3050	431	.29	3375	477	.35	3675	520	.44
3578	900	2590	366	.19	2950	417	.26	3217	455	.34	3500	495	.42	3780	535	.51
3976	1000	2830	400	.23	3130	443	.32	3430	485	.41	3650	516	.50	3900	552	.58
4374	1100				3310	468	.37	3590	508	.48	3825	541	.58	4050	573	.67
4771	1200				3540	501	.46	3790	536	.56	4050	573	.67	4225	598	.77
5169	1300							3990	564	.65	4220	597	.76	4440	628	.89
5566	1400							4200	594	.76	4420	625	.89	4630	655	1.01
5964	1500										4600	651	.99	4800	679	1.14
6362	1600										4750	672	1.10	4950	700	1.24
6759	1700													5200	736	1.44
7156	1800													5400	764	1.60
STATIC PRESSURE →		3/4″			7/8″			1″			1 1/4″			1 1/2″		
3181	800	3950	559	.53	4220	597	.62	4480	634	.71	4940	699	.91	5370	760	1.14
3578	900	4050	573	.61	4290	607	.70	4530	641	.80	5000	707	1.01	5415	766	1.24
3976	1000	4160	588	.67	4400	622	.78	4630	655	.89	5075	718	1.11	5510	779	1.35
4374	1100	4290	607	.76	4520	639	.87	4750	672	.99	5170	731	1.22	5580	789	1.47
4771	1200	4425	626	.87	4650	658	.99	4860	687	1.10	5260	744	1.34	5650	799	1.60
5169	1300	4550	644	1.00	4780	676	1.11	4990	706	1.23	5390	762	1.47	5750	813	1.74
5566	1400	4800	679	1.14	4980	704	1.25	5125	725	1.37	5520	781	1.61	5860	829	1.90
5964	1500	4970	703	1.25	5180	733	1.41	5350	757	1.53	5640	798	1.80	5970	844	2.05
6362	1600	5160	730	1.40	5380	761	1.58	5510	779	1.71	5800	820	1.99	6100	863	2.27
6759	1700	5350	757	1.56	5540	784	1.74	5700	806	1.91	5990	847	2.20	6250	884	2.50
7156	1800	5550	785	1.74	5710	808	1.93	5900	835	2.10	6200	877	2.44	6435	910	2.75
7554	1900	5750	813	1.94	5920	837	2.13	6080	860	2.31	6390	904	2.66	6615	936	3.00
7952	2000	5950	842	2.15	6080	860	2.32	6260	885	2.52	6560	928	2.88	6860	970	3.30
STATIC PRESSURE →		1 3/4″			2″			2 1/4″			2 1/2″			3″		
3976	1000	5890	833	1.57	6240	883	1.82	6600	934	2.09	6910	977	2.37	7530	1065	2.91
4374	1100	5950	842	1.72	6290	890	1.98	6660	942	2.23	6970	986	2.54	7570	1071	3.12
4771	1200	6020	851	1.86	6370	901	2.15	6720	950	2.42	7030	994	2.71	7630	1079	3.32
5169	1300	6110	864	2.01	6455	913	2.28	6800	962	2.59	7100	1004	2.99	7695	1088	3.52
5566	1400	6200	877	2.18	6550	926	2.47	6880	973	2.78	7180	1016	3.11	7760	1098	3.75
5964	1500	6330	895	2.37	6635	938	2.67	6960	984	2.99	7260	1027	3.31	7825	1107	3.99
6362	1600	6450	912	2.55	6750	955	2.89	7050	997	3.22	7350	1040	3.54	7900	1117	4.24
6759	1700	6575	930	2.77	6865	971	3.10	7180	1016	3.44	7450	1054	3.80	7990	1130	4.50
7156	1800	6720	950	3.04	7000	990	3.36	7290	1031	3.69	7560	1069	4.05	8100	1146	4.80
7554	1900	6860	970	3.31	7140	1010	3.62	7400	1047	3.98	7680	1086	4.32	8200	1160	5.10
7952	2000	7080	1001	3.62	7300	1033	3.95	7560	1069	4.30	7800	1103	4.65	8320	1177	5.47
8747	2200	7450	1054	4.20	7650	1082	4.60	7920	1120	5.00	8100	1146	5.39	8580	1214	6.15
9542	2400	7800	1103	4.85	8100	1146	5.30	8250	1167	5.80	8450	1195	6.20	8850	1252	7.03

TABLE 41

No. 30 SINGLE WIDTH SINGLE INLET FAN — TYPE BI

$$\text{Max. HP} = 6.25 \left(\frac{\text{RPM}}{1000}\right)^3$$

CIRCUM. = 7.85′ WHEEL DIA. 30″ OUTLET AREA = 4.90 SQ. FT.

STATIC PRESSURE →		1/8″			1/4″			3/8″			1/2″			5/8″		
CFM	OUTLET VEL.	Tip Speed	RPM	HP	Tip Speed	RPM	HP	Tip Speed	RPM	HP	Tip Speed	RPM	HP	Tip Speed	RPM	HP
2,940	600	2025	258	.10	2430	310	.17	2825	360	.25	3185	406	.33	3515	448	.42
3,430	700	2200	280	.14	2562	326	.21	2930	373	.30	3275	417	.37	3590	457	.48
3,920	800	2380	303	.19	2755	351	.26	3050	389	.36	3375	430	.43	3675	468	.55
4,410	900	2590	330	.24	2950	376	.32	3217	410	.42	3500	446	.52	3780	482	.63
4,900	1000	2830	361	.28	3130	399	.39	3430	437	.50	3650	465	.61	3900	497	.72
5,390	1100				3310	422	.46	3590	457	.59	3825	487	.72	4050	516	.83
5,800	1200				3540	451	.56	3790	483	.70	4050	516	.83	4225	538	.95
6,370	1300							3990	508	.82	4220	538	.95	4440	566	1.09
6,860	1400							4200	535	.94	4420	563	1.09	4630	590	1.25
7,350	1500										4600	586	1.22	4800	611	1.40
7,840	1600										4750	605	1.35	4950	631	1.55
8,330	1700													5200	662	1.76
8,820	1800													5400	688	1.98
STATIC PRESSURE →		3/4″			7/8″			1″			1 1/4″			1 1/2″		
3,920	800	3950	503	.65	4220	538	.76	4480	571	.87	4940	629	1.12	5370	684	1.40
4,410	900	4050	516	.74	4290	546	.86	4530	577	.98	5000	637	1.25	5415	690	1.53
4,900	1000	4160	530	.83	4400	561	.97	4630	590	1.09	5075	646	1.37	5510	702	1.67
5,390	1100	4290	546	.93	4520	576	1.08	4750	605	1.22	5170	659	1.50	5580	711	1.81
5,880	1200	4425	564	1.08	4650	592	1.22	4860	619	1.36	5260	670	1.65	5650	720	1.97
6,370	1300	4550	580	1.23	4780	609	1.37	4990	636	1.51	5390	687	1.81	5750	732	2.14
6,860	1400	4800	611	1.40	4980	634	1.54	5125	653	1.69	5520	703	1.98	5860	746	2.34
7,350	1500	4970	633	1.55	5180	660	1.73	5350	682	1.89	5640	718	2 22	5970	761	2.56
7,840	1600	5160	657	1.75	5380	685	1.95	5510	702	2.11	5800	739	2.45	6100	777	2.79
8,330	1700	5350	682	1.95	5540	706	2.15	5700	726	2.36	5990	763	2.72	6250	796	3.05
8,820	1800	5550	707	2.15	5710	727	2.37	5900	752	2.60	6200	790	3.00	6435	820	3.38
9,310	1900	5750	732	2.40	5920	754	2.60	6080	775	2.84	6390	814	3.28	6615	843	3.67
9,800	2000	5950	758	2.65	6080	775	2.84	6260	797	3.12	6560	836	3.56	6860	874	4.05
STATIC PRESSURE →		1 3/4″			2″			2 1/4″			2 1/2″			3″		
4,900	1000	5890	750	1.93	6240	795	2.25	6600	841	2.57	6910	880	2.91	7530	959	3.58
5,390	1100	5950	758	2.12	6290	801	2.43	6660	848	2.74	6970	888	3.12	7570	964	3.84
5,880	1200	6020	767	2.30	6370	811	2.62	6720	856	2.98	7030	896	3.34	7630	972	4.08
6,370	1300	6110	778	2.48	6455	822	2.80	6800	866	3.20	7100	904	3.57	7695	980	4.34
6,860	1400	6200	790	2.68	6550	834	3.04	6880	876	3.43	7180	915	3.84	7760	989	4.61
7,350	1500	6330	806	2.92	6635	845	3.29	6960	887	3.68	7260	925	4.07	7825	997	4.91
7,840	1600	6450	822	3.14	6750	860	3.55	7050	898	3.96	7350	936	4.37	7900	1006	5.22
8,330	1700	6575	838	3.42	6865	875	3.82	7180	915	4.24	7450	949	4.68	7990	1018	5.55
8,820	1800	6720	856	3.74	7000	892	4.13	7290	929	4.54	7560	963	4.99	8100	1032	5.90
9,310	1900	6860	874	4.07	7140	910	4.46	7400	943	4.90	7680	978	5.31	8200	1045	6.29
9,800	2000	7080	902	4.45	7300	930	4.86	7560	963	5.30	7800	994	5.72	8320	1060	6.68
10,780	2200	7450	949	5.20	7650	975	5.68	7920	1009	6.16	8100	1032	6.63	8580	1093	7.58
11,760	2400	7800	994	6.00	8100	1032	6.55	8250	1051	7.15	8450	1076	7.65	8850	1127	8.65

All published ratings based on air at 70° F. and 29.92″ barometric pressure, and on tests in accordance with N.A.F.M. test code.

All published ratings based on air at 70° F. and 29.92" barometric pressure, and on tests in accordance with N.A.F.M. test code.

TABLE 42

No. 33 SINGLE WIDTH SINGLE INLET FAN — TYPE BI

$$\text{Max. HP} = 10.1 \left(\frac{\text{RPM}}{1000}\right)^3$$

CIRCUM. = 8.64′ WHEEL DIA. 33" OUTLET AREA = 5.94 SQ. FT.

STATIC PRESSURE ➤		1/8"			1/4"			3/8"			1/2"			5/8"		
CFM	OUTLET VEL.	Tip Speed	RPM	HP	Tip Speed	RPM	HP	Tip Speed	RPM	HP	Tip Speed	RPM	HP	Tip Speed	RPM	HP
3,564	600	2025	234	.12	2430	281	.21	2925	327	.33	3185	369	.43	3515	407	.51
4,158	700	2200	255	.17	2562	297	.25	2930	339	.36	3275	379	.45	3590	416	.59
4,752	800	2380	275	.23	2755	319	.32	3050	353	.43	3375	391	.53	3675	425	.66
5,346	900	2590	300	.28	2950	341	.40	3217	372	.51	3530	405	.63	3780	438	.76
5,940	1000	2830	328	.34	3130	362	.47	3430	397	.61	3650	422	.74	3900	451	.87
6,534	1100				3310	383	.55	3590	416	.72	3825	443	.87	4050	469	1.00
7,128	1200				3540	410	.68	3790	439	.84	4050	469	1.00	4225	489	1.15
7,722	1300							3990	462	.99	4220	488	1.15	4440	514	1.32
8,316	1400							4200	486	1.14	4420	512	1.32	4630	536	1.52
8,910	1500										4600	532	1.49	4800	556	1.70
9,504	1600										4750	550	1.64	4950	573	1.88
10,098	1700													5200	602	2.15
10,692	1800													5400	625	2.42
STATIC PRESSURE ➤		3/4"			7/8"			1"			1 1/4"			1 1/2"		
4,752	800	3950	457	.80	4220	488	.93	4490	519	1.06	4940	572	1.36	5370	622	1.70
5,346	900	4050	469	.90	4290	497	1.04	4530	524	1.19	5000	579	1.51	5415	627	1.85
5,940	1000	4160	481	1.00	4400	509	1.17	4630	536	1.32	5075	587	1.66	5510	639	2.03
6,534	1100	4290	497	1.14	4520	523	1.30	4750	550	1.48	5170	599	1.82	5590	646	2.20
7,128	1200	4425	512	1.31	4650	538	1.47	4860	563	1.65	5260	609	2.00	5650	654	2.38
7,722	1300	4550	526	1.50	4780	553	1.66	4990	578	1.83	5390	624	2.20	5750	666	2.60
8,316	1400	4800	556	1.70	4980	576	1.87	5125	593	2.04	5520	639	2.40	5860	678	2.84
8,910	1500	4970	575	1.90	5180	600	2.10	5350	619	2.29	5640	653	2.67	5970	691	3.10
9,504	1600	5160	597	2.12	5380	623	2.36	5510	638	2.56	5930	671	2.98	6100	706	3.38
10,098	1700	5350	619	2.34	5540	641	2.60	5700	660	2.86	5990	693	3.30	6250	723	3.71
10,692	1800	5550	642	2.62	5710	661	2.88	5900	683	3.14	6200	718	3.67	6435	745	4.11
11,286	1900	5750	666	2.90	5920	685	3.16	6080	704	3.44	6390	740	3.99	6615	766	4.46
11,880	2000	5950	689	3.22	6080	704	3.44	6260	725	3.78	6560	759	4.32	6960	794	4.92
STATIC PRESSURE ➤		1 3/4"			2"			2 1/4"			2 1/2"			3"		
5,940	1000	5890	682	2.35	6240	722	2.73	6630	764	3.12	6910	800	3.54	7530	872	4.35
6,534	1100	5950	689	2.58	6290	728	2.95	6660	771	3.33	6970	807	3.78	7570	876	4.66
7,128	1200	6020	697	2.78	6370	737	3.18	6720	778	3.61	7030	814	4.05	7630	883	4.96
7,722	1300	6110	707	3.01	6455	747	3.41	6800	787	3.88	7100	822	4.33	7695	891	5.27
8,316	1400	6200	718	3.25	6550	758	3.69	6880	796	4.16	7180	831	4.66	7760	898	5.60
8,910	1500	6330	733	3.52	6635	768	4.00	6960	806	4.47	7260	840	4.94	7825	906	5.96
9,504	1600	6450	747	3.80	6750	781	4.32	7050	816	4.81	7350	851	5.30	7900	914	6.34
10,098	1700	6575	761	4.15	6865	795	4.64	7180	831	5.15	7450	862	5.68	7990	925	6.75
10,692	1800	6720	778	4.54	7000	810	5.01	7290	844	5.51	7560	875	6.06	8100	938	7.18
11,286	1900	6860	794	4.95	7140	826	5.41	7400	856	5.95	7680	889	6.46	8200	949	7.62
11,880	2000	7080	819	5.41	7300	845	5.90	7560	875	6.44	7800	903	6.95	8320	963	8.10
13,068	2200	7450	862	6.31	7650	885	6.90	7920	917	7.48	8100	938	8.05	8580	993	9.20
14,256	2400	7800	903	7.26	8100	938	7.90	8250	955	8.66	8450	978	9.29	8850	1024	10.5

TABLE 43

No. 36 SINGLE WIDTH SINGLE INLET FAN — TYPE BI

$$\text{Max. HP} = 15.6 \left(\frac{\text{RPM}}{1000}\right)^3$$

CIRCUM. = 9.425′ WHEEL DIA. 36" OUTLET AREA = 7.07 SQ. FT

STATIC PRESSURE ➤		1/8"			1/4"			3/8"			1/2"			5/8"		
CFM	OUTLET VEL.	Tip Speed	RPM	HP	Tip Speed	RPM	HP	Tip Speed	RPM	HP	Tip Speed	RPM	HP	Tip Speed	RPM	HP
4,242	600	2025	215	.14	2430	258	.25	2825	300	.36	3185	338	.47	3515	373	.61
4,949	700	2200	233	.20	2562	272	.29	2930	311	.43	3275	347	.54	3590	381	.70
5,656	800	2380	253	.27	2755	292	.38	3050	324	.52	3375	358	.63	3675	390	.79
6,363	900	2590	275	.34	2950	313	.47	3217	341	.61	3500	371	.74	3780	401	.90
7,070	1000	2930	300	.41	3130	332	.56	3430	364	.72	3650	387	.88	3900	414	1.03
7,777	1100				3310	351	.65	3590	381	.86	3825	406	1.03	4050	430	1.19
8,484	1200				3540	376	.81	3790	402	1.00	4050	430	1.19	4225	448	1.37
9,191	1300							3990	423	1.18	4220	448	1.37	4440	471	1.57
9,898	1400							4200	446	1.36	4420	469	1.58	4630	491	1.80
10,605	1500										4600	488	1.78	4800	509	2.03
11,312	1600										4750	504	1.98	4950	525	2.26
12,019	1700													5200	552	2.57
12,726	1800													5400	573	2.88
STATIC PRESSURE ➤		3/4"			7/8"			1"			1 1/4"			1 1/2"		
5,656	800	3950	419	.95	4220	448	1.10	4480	475	1.26	4940	524	1.62	5370	570	2.02
6,363	900	4050	430	1.06	4290	455	1.24	4530	481	1.42	5000	531	1.80	5415	575	2.20
7,070	1000	4160	441	1.19	4400	467	1.40	4630	491	1.57	5075	538	1.98	5510	585	2.40
7,777	1100	4290	455	1.35	4520	480	1.55	4750	504	1.75	5170	549	2.16	5580	592	2.61
8,484	1200	4425	469	1.55	4650	493	1.75	4860	516	1.96	5260	558	2.38	5650	599	2.83
9,191	1300	4550	483	1.78	4780	507	1.98	4990	529	2.18	5390	572	2.61	5750	610	3.08
9,898	1400	4800	509	2.02	4980	528	2.23	5125	544	2.43	5520	586	2.86	5860	622	3.37
10,605	1500	4970	527	2.27	5180	550	2.50	5350	568	2.72	5640	598	3.17	5970	633	3.69
11,312	1600	5160	547	2.54	5380	571	2.81	5510	585	3.04	5800	615	3.53	6100	647	4.02
12,019	1700	5350	568	2.82	5540	588	3.08	5700	605	3.40	5990	636	3.92	6250	663	4.40
12,726	1800	5550	589	3.12	5710	606	3.42	5900	626	3.74	6200	658	4.33	6435	683	4.88
13,433	1900	5750	610	3.46	5920	628	3.76	6080	645	4.10	6390	678	4.73	6615	702	5.30
14,140	2000	5950	631	3.84	6080	645	4.10	6260	664	4.50	6560	696	5.15	6860	728	5.85
STATIC PRESSURE ➤		1 3/4"			2"			2 1/4"			2 1/2"			3"		
7,070	1000	5890	625	2.79	6240	662	3.24	6600	700	3.72	6910	733	4.21	7530	799	5.18
7,777	1100	5950	631	3.06	6290	667	3.51	6660	707	3.96	6970	740	4.50	7570	803	5.54
8,484	1200	6020	639	3.31	6370	676	3.78	6720	713	4.30	7030	746	4.81	7630	810	5.90
9,191	1300	6110	648	3.58	6455	685	4.05	6800	721	4.62	7100	753	5.16	7695	816	6.26
9,898	1400	6200	658	3.87	6550	695	4.39	6880	730	4.95	7180	762	5.54	7760	823	6.66
10,605	1500	6330	672	4.19	6635	704	4.75	6960	738	5.31	7260	770	5.87	7825	830	7.10
11,312	1600	6450	684	4.52	6750	716	5.13	7050	748	5.72	7350	780	6.30	7900	838	7.54
12,019	1700	6575	698	4.93	6865	728	5.52	7180	762	6.13	7450	790	6.75	7990	848	8.01
12,726	1800	6720	713	5.40	7000	743	5.96	7290	773	6.55	7560	802	7.20	8100	859	8.53
13,433	1900	6860	728	5.87	7140	758	6.44	7400	785	7.06	7680	815	7.69	8200	870	9.09
14,140	2000	7080	751	6.44	7300	775	7.02	7560	802	7.65	7800	828	8.27	8320	883	9.64
15,554	2200	7450	790	7.50	7650	812	8.20	7920	840	8.89	8100	859	9.58	8580	910	11.0
16,968	2400	7800	828	8.65	8100	859	9.45	8250	875	10.3	8450	897	11.0	8650	939	12.5

All published ratings based on air at 70° F. and 29.92" barometric pressure, and on tests in accordance with N.A.F.M. test code.

BI – SWSI

BI – SWSI

TABLE 44

No. 40 SINGLE WIDTH SINGLE INLET FAN — TYPE BI

$$\text{Max. HP} = 27.4 \left(\frac{\text{RPM}}{1000}\right)^3$$

CIRCUM. = 10.55′ WHEEL DIA. 40¼″ OUTLET AREA = 8.86 SQ. FT.

STATIC PRESSURE →		⅛″			¼″			⅜″			½″			⅝″		
CFM	OUTLET VEL.	Tip Speed	RPM	HP	Tip Speed	RPM	HP	Tip Speed	RPM	HP	Tip Speed	RPM	HP	Tip Speed	RPM	HP
5,316	600	2025	192	.18	2430	230	.31	2825	268	.45	3185	302	.59	3515	333	.76
6,202	700	2200	209	.25	2562	243	.36	2930	278	.54	3275	310	.68	3590	340	.87
7,088	800	2380	226	.34	2755	261	.47	3050	289	.65	3375	320	.79	3675	348	.99
7,974	900	2590	245	.43	2950	280	.59	3217	305	.76	3500	332	.93	3780	358	1.13
8,860	1000	2830	268	.52	3130	297	.70	3430	325	.90	3650	346	1.10	3900	370	1.29
9,746	1100				3310	314	.82	3590	340	1.07	3825	363	1.29	4050	384	1.49
10,632	1200				3540	336	1.02	3790	359	1.25	4050	384	1.49	4225	400	1.71
11,518	1300							3990	378	1.47	4220	400	1.72	4440	421	1.96
12,404	1400							4200	398	1.70	4420	419	1.98	4630	439	2.25
13,290	1500										4600	436	2.23	4800	455	2.54
14,176	1600										4750	450	2.48	4950	469	2.83
15,062	1700													5200	493	3.22
15,948	1800													5400	512	3.60
STATIC PRESSURE →		¾″			⅞″			1″			1 ¼″			1 ½″		
7,088	800	3950	374	1.19	4220	400	1.37	4480	425	1.58	4940	468	2.02	5370	509	2.52
7,974	900	4050	384	1.33	4290	407	1.55	4530	429	1.78	5000	474	2.25	5415	513	2.75
8,860	1000	4160	394	1.49	4400	417	1.75	4630	439	1.97	5075	481	2.48	5510	522	3.00
9,746	1100	4290	407	1.69	4520	428	1.94	4750	450	2.19	5170	490	2.70	5580	529	3.26
10,632	1200	4425	419	1.94	4650	441	2.19	4860	461	2.45	5260	499	2.98	5650	536	3.54
11,518	1300	4550	431	2.23	4780	453	2.48	4990	473	2.72	5390	511	3.27	5750	545	3.85
12,404	1400	4800	455	2.53	4980	472	2.79	5125	486	3.04	5520	523	3.58	5860	555	4.22
13,290	1500	4970	471	2.84	5180	491	3.12	5350	507	3.40	5640	535	3.97	5970	566	4.62
14,176	1600	5160	489	3.17	5380	510	3.53	5510	522	3.80	5800	550	4.42	6100	578	5.03
15,062	1700	5350	507	3.52	5540	525	3.86	5700	540	4.25	5990	568	4.90	6250	592	5.50
15,948	1800	5550	526	3.91	5710	541	4.28	5900	559	4.69	6200	588	5.42	6435	610	6.10
16,834	1900	5750	545	4.33	5920	561	4.70	6080	576	5.13	6390	606	5.92	6615	627	6.65
17,720	2000	5950	564	4.80	6080	576	5.13	6260	593	5.63	6560	622	6.45	6860	650	7.32
STATIC PRESSURE →		1 ¾″			2″			2 ¼″			2 ½″			3″		
8,860	1000	5890	558	3.49	6240	591	4.05	6600	626	4.65	6910	655	5.27	7530	714	6.49
9,746	1100	5950	564	3.83	6290	596	4.39	6660	631	4.95	6970	661	5.63	7570	718	6.93
10,632	1200	6020	571	4.14	6370	604	4.73	6720	637	5.38	7030	666	6.02	7630	723	7.38
11,518	1300	6110	579	4.48	6455	612	5.07	6800	645	5.78	7100	673	6.45	7695	729	7.83
12,404	1400	6200	588	4.84	6550	621	5.50	6880	652	6.20	7180	681	6.93	7760	736	8.34
13,290	1500	6330	600	5.24	6635	629	5.94	6960	660	6.65	7260	688	7.35	7825	742	8.89
14,176	1600	6450	611	5.65	6750	640	6.42	7050	668	7.16	7350	697	7.89	7900	749	9.45
15,062	1700	6575	623	6.17	6865	651	6.91	7180	681	7.66	7450	706	8.44	7990	757	10.0
15,948	1800	6720	637	6.75	7000	664	7.45	7290	691	8.20	7560	717	9.00	8100	768	10.7
16,834	1900	6860	650	7.35	7140	677	8.05	7400	701	8.84	7680	728	9.61	8200	777	11.4
17,720	2000	7080	671	8.06	7300	692	8.80	7560	717	9.58	7800	739	10.4	8320	789	12.0
19,492	2200	7450	706	9.40	7650	725	10.2	7920	751	11.1	8100	768	12.0	8580	813	13.7
21,264	2400	7800	739	10.8	8100	768	11.8	8250	782	12.9	8450	801	13.7	8850	839	15.6

TABLE 45

No. 44 SINGLE WIDTH SINGLE INLET FAN — TYPE BI

$$\text{Max. HP} = 44.5 \left(\frac{\text{RPM}}{1000}\right)^3$$

CIRCUM. = 11.65′ WHEEL DIA. 44½″ OUTLET AREA = 10.8 SQ. FT.

STATIC PRESSURE →		⅛″			¼″			⅜″			½″			⅝″		
CFM	OUTLET VEL.	Tip Speed	RPM	HP	Tip Speed	RPM	HP	Tip Speed	RPM	HP	Tip Speed	RPM	HP	Tip Speed	RPM	HP
6,480	600	2025	174	.22	2430	209	.38	2825	242	.55	3185	273	.72	3515	302	.93
7,560	700	2200	189	.30	2562	220	.44	2930	252	.66	3275	281	.84	3590	308	1.06
8,640	800	2380	204	.41	2755	236	.58	3050	262	.79	3375	290	.97	3675	315	1.21
9,720	900	2590	222	.52	2950	253	.72	3217	276	.93	3500	300	1.14	3780	324	1.38
10,800	1000	2830	243	.63	3130	269	.86	3430	294	1.10	3650	313	1.34	3900	335	1.57
11,880	1100				3310	284	1.00	3590	308	1.30	3825	328	1.57	4050	348	1.82
12,960	1200				3540	304	1.25	3790	325	1.53	4050	348	1.82	4225	363	2.09
14,040	1300							3990	342	1.80	4220	362	2 10	4440	381	2.39
15,120	1400							4200	361	2 08	4420	379	2.41	4630	397	2.75
16,200	1500										4600	395	2.72	4800	412	3.10
17,280	1600										4750	408	3.02	4950	425	3 45
18,360	1700													5200	446	3 93
19,440	1800													5400	464	4 40
STATIC PRESSURE →		¾″			⅞″			1″			1 ¼″			1 ½″		
8,640	800	3950	339	1.45	4220	362	1.67	4480	385	1.93	4940	424	2.47	5370	461	3.08
9,720	900	4050	348	1.62	4290	368	1 89	4530	389	2.17	5000	429	2.75	5415	465	3.36
10,800	1000	4160	357	1.82	4400	378	2 14	4630	397	2.40	5075	436	3.03	5510	473	3.66
11,880	1100	4290	368	2.06	4520	388	2 37	4750	408	2.67	5170	444	3.30	5580	479	3.98
12,960	1200	4425	380	2.37	4650	399	2 68	4860	417	2.99	5260	452	3 64	5650	485	4 32
14,040	1300	4550	391	2.72	4780	410	3.03	4990	428	3.22	5390	463	4.00	5750	494	4.70
15,120	1400	4800	412	3.09	4980	427	3.40	5125	440	3.71	5520	474	4.38	5860	503	5 16
16,200	1500	4970	427	3.46	5180	445	3 81	5350	459	4.15	5640	484	4 85	5970	512	5 65
17,280	1600	5160	443	3 87	5380	462	4 30	5510	473	4 64	5800	498	5 40	6100	524	6 15
18,360	1700	5350	459	4.30	5540	476	4.70	5700	489	5.18	5990	514	5 99	6250	536	6.72
19,440	1800	5550	476	4 80	5710	490	5.23	5900	506	5.73	6200	532	6 62	6435	552	7.45
20,520	1900	5750	494	5 30	5920	508	5 74	6080	522	6 26	6390	548	7 22	6615	568	8 12
21,600	2000	5950	511	5 86	6080	522	6 26	6260	537	6 86	6560	563	7 86	6860	589	8.85
STATIC PRESSURE →		1 ¾″			2″			2 ¼″			2 ½″			3″		
10,800	1000	5890	506	4.26	6240	536	4 95	6600	567	5 68	6910	593	6.42	7530	646	7.91
11,880	1100	5950	511	4 67	6290	540	5 37	6660	572	6 04	6970	598	6 87	7570	650	8.46
12,960	1200	6020	517	5 06	6370	547	5.78	6720	577	6 66	7030	603	7.35	7630	655	9.00
14,040	1300	6110	524	5 47	6455	554	6 20	6800	584	7 05	7100	609	7 87	7695	661	9.56
15,120	1400	6200	532	5 81	6550	562	6.72	6880	591	7 56	7180	616	8.45	7760	666	10.2
16,200	1500	6330	543	6 40	6635	570	7.25	6960	597	8.11	7260	623	8.96	7825	672	10 8
17,280	1600	6450	554	6 90	6750	579	7 85	7050	605	8.74	7350	631	9.62	7900	678	11.5
18,360	1700	6575	564	7.54	6865	589	8 44	7180	616	9.35	7450	639	10.3	7990	686	12 2
19,440	1800	6720	577	8.25	7000	601	9.10	7290	626	10.0	7560	649	11.0	8100	695	13 1
20,520	1900	6860	589	8 98	7140	613	9 83	7400	635	10.8	7680	659	11.7	8200	704	13.9
21,600	2000	7080	608	9 85	7300	627	10.7	7560	649	11 7	7800	670	12.7	8320	714	14 7
23,760	2200	7450	639	11.5	7650	657	12 5	7920	680	13 7	8100	695	14.7	8580	736	16.7
25,920	2400	7800	670	13 2	8100	695	14.4	8250	708	15.7	8450	725	16 7	8850	760	19.0

All published ratings based on air at 70° F and 29.92″ barometric pressure, and on tests in accordance with N.A.F.M test code

All published ratings based on air at 70° F and 29.92" barometric pressure, and on tests in accordance with N.A.F.M test code

TABLE 46

No. 49 SINGLE WIDTH SINGLE INLET FAN — TYPE BI

$$\text{Max. HP} = 72.5 \left(\frac{\text{RPM}}{1000}\right)^3$$

CIRCUM. = 12.83′ WHEEL DIA. 49" OUTLET AREA = 13.09 SQ. FT.

STATIC PRESSURE →		1/8"			1/4"			3/8"			1/2"			5/8"		
CFM	OUTLET VEL.	Tip Speed	RPM	HP	Tip Speed	RPM	HP	Tip Speed	RPM	HP	Tip Speed	RPM	HP	Tip Speed	RPM	HP
7,854	600	2025	158	.26	2430	189	.46	2825	220	67	3185	248	.87	3515	274	1.13
9,163	700	2200	171	.37	2562	200	.54	2930	228	.80	3275	255	1.00	3590	280	1.29
10,472	800	2380	186	.50	2755	215	.70	3050	238	.96	3375	263	1 16	3675	286	1.46
11,781	900	2590	202	.63	2950	230	.87	3217	251	1.13	3500	273	1.37	3780	295	1.67
13,090	1000	2830	221	.76	3130	244	1.04	3430	267	1.33	3650	284	1.63	3900	304	1.91
14,399	1100				3310	258	1.21	3590	280	1.59	3825	298	1.91	4050	316	2.20
15,708	1200				3540	276	1.50	3790	295	1.85	4050	316	2.20	4225	329	2.54
17,017	1300							3990	311	2 18	4220	329	2.54	4440	346	2.90
18,326	1400							4200	327	2.52	4420	345	2.93	4630	361	3.34
19,635	1500										4600	359	3.30	4800	374	3.76
20,944	1600										4750	370	3.68	4950	386	4.20
22,253	1700													5200	405	4.76
23,562	1800													5400	420	5.34
STATIC PRESSURE →		3/4"			7/8"			1"			1 1/4"			1 1/2"		
10,472	800	3950	308	1.75	4220	329	2.03	4480	349	2.33	4940	385	3.00	5370	419	3.73
11,781	900	4050	316	1.96	4290	334	2.29	4530	353	2.63	5000	390	3.33	5415	422	4.07
13,090	1000	4160	324	2.20	4400	343	2.59	4630	361	2.90	5075	396	3.66	5510	429	4.43
14,399	1100	4290	334	2.50	4520	352	2.86	4750	370	3.24	5170	403	4.00	5580	435	4.82
15,708	1200	4425	345	2.86	4650	362	3.24	4860	379	3.62	5260	410	4.40	5650	440	5.23
17,017	1300	4550	355	3.29	4780	373	3.66	4990	389	4.03	5390	420	4.83	5750	448	5.70
18,326	1400	4800	374	3.73	4980	388	4.12	5125	399	4.49	5520	430	5.29	5860	457	6.23
19,635	1500	4970	387	4.21	5180	404	4.62	5350	417	5.03	5640	440	5.86	5970	465	6.82
20,944	1600	5160	402	4.70	5380	419	5.21	5510	429	5.62	5800	452	6.52	6100	475	7.45
22,253	1700	5350	417	5.22	5540	432	5.70	5700	444	6.29	5990	467	7.25	6250	487	8.14
23,562	1800	5550	433	5.80	5710	445	6.33	5900	460	6.95	6200	483	8.02	6435	502	9.02
24,871	1900	5750	448	6.40	5920	461	6.96	6080	474	7.60	6390	498	8.80	6615	516	9.80
26,180	2000	5950	464	7.12	6080	474	7.60	6260	488	8.35	6560	511	9.55	6860	535	10.8
STATIC PRESSURE →		1 3/4"			2"			2 1/4"			2 1/2"			3"		
13,090	1000	5890	459	5.16	6240	486	6.00	6600	514	6.88	6910	539	7.79	7530	587	9.59
14,399	1100	5950	464	5.66	6290	490	6.49	6660	519	7.31	6970	543	8.32	7570	590	10.2
15,708	1200	6020	469	6.12	6370	496	6.99	6720	524	7.95	7030	548	8.90	7630	595	10.9
17,017	1300	6110	476	6.62	6455	503	7.49	6800	530	8.55	7100	553	9.55	7695	600	11.6
18,326	1400	6200	483	7.15	6550	511	8.12	6880	536	9.15	7180	560	10.2	7760	605	12.3
19,635	1500	6330	493	7.75	6635	517	8.79	6960	542	9.82	7260	566	10.8	7825	610	13.1
20,944	1600	6450	503	8.35	6750	526	9.50	7050	549	10.6	7350	573	11.6	7900	616	13.9
22,253	1700	6575	512	9.12	6865	535	10.2	7180	560	11.3	7450	581	12.5	7990	623	14.8
23,562	1800	6720	524	10.0	7000	546	11.0	7290	568	12.1	7560	589	13.3	8100	631	15.8
24,871	1900	6860	535	10.8	7140	557	11.9	7400	577	13.1	7680	599	14,2	8200	639	16.8
26,180	2000	7080	552	11.9	7300	569	13.0	7560	589	14.2	7800	608	15.3	8320	648	17.9
28,798	2200	7450	581	13.9	7650	596	15.2	7920	617	16.4	8100	631	17.7	8580	669	20.3
31,416	2400	7800	608	16.0	8100	631	17.5	8250	643	19.0	8450	659	20.3	8850	690	23.1

TABLE 47

No. 54 SINGLE WIDTH SINGLE INLET FAN — TYPE BI

$$\text{Max. HP} = 118 \left(\frac{\text{RPM}}{1000}\right)^3$$

CIRCUM. = 14.14′ WHEEL DIA. 54" OUTLET AREA = 15.9 SQ. FT.

STATIC PRESSURE →		1/8"			1/4"			3/8"			1/2"			5/8"		
CFM	OUTLET VEL.	Tip Speed	RPM	HP	Tip Speed	RPM	HP	Tip Speed	RPM	HP	Tip Speed	RPM	HP	Tip Speed	RPM	HP
9,540	600	2025	143	.32	2430	172	.56	2825	200	.80	3185	225	1.08	3515	248	1.36
11,130	700	2200	155	.44	2562	181	.68	2930	207	.96	3275	231	1.24	3590	254	1.56
12,720	800	2380	168	.60	2755	193	.84	3050	215	1.16	3375	238	1.40	3675	260	1.76
14,310	900	2590	183	.76	2950	208	1.04	3217	227	1.36	3500	247	1.68	3780	267	2.04
15,900	1000	2830	200	.92	3130	221	1.28	3430	242	1.64	3650	258	2.00	3900	276	2.32
17,490	1100				3310	234	1.48	3590	254	1.92	3825	270	2.32	4050	286	2.68
19,080	1200				3540	250	1.84	3790	268	2.24	4050	286	2.68	4225	299	3.08
20,670	1300							3990	282	2.60	4220	298	3.04	4440	314	3.56
22,260	1400							4200	297	3.04	4420	312	3.56	4630	327	4.04
23,850	1500										4600	325	3.96	4800	339	4.56
25,440	1600										4750	336	4.40	4950	350	4.96
27,030	1700													5200	368	5.76
28,620	1800													5400	382	6.40
STATIC PRESSURE →		3/4"			7/8"			1"			1 1/4"			1 1/2"		
12,720	800	3950	279	2.02	4220	298	2.48	4480	317	2.84	4940	349	3.64	5370	380	4.56
14,310	900	4050	286	2.44	4290	303	2.80	4530	321	3.20	5000	353	4.04	5415	383	4.96
15,900	1000	4160	294	2.68	4400	311	3.12	4630	328	3.56	5075	359	4.44	5510	388	5.40
17,490	1100	4290	303	3.04	4520	319	3.48	4750	336	3.96	5170	365	4.88	5580	394	5.88
19,080	1200	4425	313	3.48	4650	329	3.96	4860	344	4.40	5260	372	5.36	5650	400	6 40
20,670	1300	4550	322	4.00	4780	338	4.44	4990	353	4.92	5390	381	5.88	5750	407	6.96
22,260	1400	4800	339	4.56	4980	352	5.00	5125	362	5.48	5520	390	6.44	5860	414	7.60
23,850	1500	4970	351	5.16	5180	366	5.64	5350	379	6.12	5640	399	7.20	5970	422	8.20
25,440	1600	5160	365	5.60	5380	380	6.32	5510	390	6.84	5800	410	7.96	6100	431	9.08
27,030	1700	5350	378	6.24	5540	392	6.96	5700	403	7.64	5990	423	8.80	6250	442	10.0
28,620	1800	5550	392	6.96	5710	404	7.72	5900	417	8.40	6200	438	9.75	6435	455	11.0
30,210	1900	5750	406	7.76	5920	418	8.52	6080	430	9.24	6390	452	10.6	6615	468	12.0
31,800	2000	5950	421	8.60	6080	430	9.28	6260	442	10.1	6560	464	11.5	6860	485	13.2
STATIC PRESSURE →		1 3/4"			2"			2 1/4"			2 1/2"			3"		
15,900	1000	5890	416	6.28	6240	441	7.28	6600	467	8.36	6910	.489	9.48	7530	532	11.6
17,490	1100	5950	421	6.88	6290	445	7.92	6660	471	8.92	6970	493	10.2	7570	536	12.5
19,080	1200	6020	426	7.44	6370	451	8.60	6720	475	9.68	7030	497	10.8	7630	540	13.3
20,670	1300	6110	432	8.04	6455	457	9.12	6800	481	10.4	7100	502	11.6	7695	544	14.1
22,260	1400	6200	439	8.72	6550	463	9.88	6880	486	11.1	7180	508	12.4	7760	549	15.0
23,850	1500	6330	447	9.48	6635	469	10.7	6960	492	12.0	7260	514	13.2	7825	554	16.0
25,440	1600	6450	456	10.2	6750	477	11.6	7050	498	12.9	7350	520	14.2	7900	559	17.0
27,030	1700	6575	465	11.0	6865	485	12.4	7180	508	13.8	7450	527	15.2	7990	565	18.0
28,620	1800	6720	475	12.1	7000	495	13.4	7290	516	14.8	7560	535	16.2	8100	573	19.2
30,210	1900	6860	485	13.2	7140	505	14.5	7400	524	16.0	7680	543	17.3	8200	580	20.4
31,800	2000	7080	500	14.5	7300	517	15.8	7560	534	17.2	7800	551	18.6	8320	588	22.0
34,980	2200	7450	527	16.8	7650	541	18.4	7920	560	20.0	8100	573	21.6	8580	607	24.6
38,160	2400	7800	552	19 4	8100	573	21.2	6250	584	23.2	8450	597	24.8	8850	626	28.1

All published ratings based on air at 70° F. and 29.92" barometric pressure, and on tests in accordance with N.A.F.M. test code.

BI – SWSI

TABLE 48

No. 60 SINGLE WIDTH SINGLE INLET FAN — TYPE BI

$$\text{Max. HP} = 200\left(\frac{\text{RPM}}{1000}\right)^3$$

CIRCUM. = 15.71′ WHEEL DIA. 60″ OUTLET AREA = 19.63 SQ. FT.

STATIC PRESSURE →		1/8″			1/4″			3/8″			1/2″			5/8″		
CFM	OUTLET VEL.	Tip Speed	RPM	HP	Tip Speed	RPM	HP	Tip Speed	RPM	HP	Tip Speed	RPM	HP	Tip Speed	RPM	HP
11,731	600	2025	129	.40	2430	155	68	2825	180	1.00	3185	203	1.32	3515	224	1.68
13,745	700	2200	140	.56	2562	163	.84	2930	186	1.20	3275	208	1.48	3590	229	1.92
15,708	800	2380	152	.76	2755	175	1.04	3050	194	1.44	3375	215	1.72	3675	234	2.20
17,672	900	2590	165	.96	2950	186	1.28	3217	205	1.68	3500	223	2.08	3780	241	2.52
19,635	1000	2830	180	1.12	3130	199	1.56	3430	218	2.00	3650	232	2.44	3900	249	2.88
21,598	1100				3310	211	1.84	3590	229	2.36	3825	243	2.88	4050	258	3.32
23,462	1200				3540	225	2.24	3790	241	2.80	4050	258	3.32	4225	269	3.80
25,525	1300							3990	254	3.28	4220	269	3.80	4440	283	4.36
27,489	1400							4200	267	3.76	4420	281	4.36	4630	295	5.00
29,452	1500										4600	293	4.88	4800	305	5.60
31,416	1600										4750	302	5.40	4950	315	6.20
33,380	1700													5200	331	7.04
35,344	1800													5400	344	7.92
STATIC PRESSURE →		3/4″			7/8″			1″			1 1/4″			1 1/2″		
15,708	800	3950	251	2.60	4220	269	3.04	4480	285	3.48	4940	314	4.48	5370	342	5.60
17,672	900	4050	258	2.96	4290	273	3.44	4530	289	3.92	5000	318	5.00	5415	345	6.12
19,635	1000	4160	265	3.32	4400	280	3.88	4630	295	4.36	5075	323	5.48	5510	351	6.68
21,598	1100	4290	273	3.72	4520	288	4.32	4750	302	4.88	5170	329	6.00	5580	355	7.24
23,462	1200	4425	282	4.32	4650	296	4.88	4860	309	5.44	5260	335	6.60	5650	360	7.88
25,525	1300	4550	290	4.92	4780	305	5.48	4990	318	6.04	5390	344	7.24	5750	366	8.56
27,489	1400	4800	305	5.60	4980	317	6.16	5125	327	6.76	5520	352	7.92	5860	373	9.36
29,452	1500	4970	317	6.20	5180	330	6.92	5350	341	7.56	5640	359	8.88	5970	380	10.2
31,416	1600	5160	329	7.00	5380	342	7.80	5510	351	8.44	5800	369	9.80	6100	389	11.2
33,380	1700	5350	341	7.80	5540	353	8.60	5700	363	9.44	5990	382	10.9	6250	398	12.2
35,344	1800	5550	353	8.60	5710	364	9.48	5900	376	10.4	6200	395	12.1	6435	410	13.5
37,307	1900	5750	366	9.60	5920	377	10.4	6080	387	11.3	6390	407	13.1	6615	417	14.7
39,270	2000	5950	379	10.6	6080	388	11.3	6260	398	12.5	6560	418	14.3	6860	437	16.2
STATIC PRESSURE →		1 3/4″			2″			2 1/4″			2 1/2″			3″		
19,635	1000	5890	375	7.72	6240	397	9.00	6600	420	10.3	6910	440	11.6	7530	479	14.3
21,598	1100	5950	379	8.48	6290	401	9.72	6660	424	11.0	6970	444	12.5	7570	482	15.3
23,462	1200	6020	384	9.20	6370	406	10.5	6720	428	12.0	7003	448	13.3	7630	486	16.3
25,525	1300	6110	389	9.92	6455	411	11.2	6800	433	12.8	7100	452	14.3	7695	490	17.3
27,489	1400	6200	395	10.7	6550	417	12.2	6880	438	13.7	7180	457	15.3	7760	494	18.4
29,452	1500	6330	403	11.7	6635	423	13.2	6960	443	14.7	7260	462	16.3	7825	498	19.6
31,416	1600	6450	411	12.6	6750	430	14.2	7050	449	15.8	7350	468	17.5	7900	503	20.9
33,380	1700	6575	419	13.7	6865	437	15.3	7180	457	17.0	7450	474	18.7	7990	509	22.2
35,344	1800	6720	428	15.0	7000	446	16.5	7290	464	18.2	7560	481	20.0	8100	516	23.6
37,307	1900	6860	437	16.3	7140	455	17.8	7400	471	19.6	7680	489	21.2	8200	523	25.2
39,270	2000	7080	451	17.8	7300	465	19.4	7560	481	21.2	7800	497	22.9	8320	530	26.7
43,196	2200	7450	474	20.8	7650	487	22.7	7920	504	24.6	8100	516	26.5	8580	547	30 3
46 922	2400	7800	497	24.0	8100	516	26.2	8250	526	28.6	8450	538	30.6	8850	563	34.6

TABLE 49

No. 66 SINGLE WIDTH SINGLE INLET FAN — TYPE BI

$$\text{Max. HP} = 322\left(\frac{\text{RPM}}{1000}\right)^3$$

CIRCUM. = 17.28′ WHEEL DIA. 66″ OUTLET AREA = 23.75 SQ. FT.

STATIC PRESSURE →		1/8″			1/4″			3/8″			1/2″			5/8″		
CFM	OUTLET VEL.	Tip Speed	RPM	HP	Tip Speed	RPM	HP	Tip Speed	RPM	HP	Tip Speed	RPM	HP	Tip Speed	RPM	HP
14,256	600	2025	117	.48	2430	140	.84	2825	163	1.20	3185	184	1.60	3515	203	2.04
16,632	700	2200	127	.68	2562	149	1.00	2930	168	1.44	3275	190	1.80	3590	208	2.36
19,008	800	2380	138	.92	2755	159	1.28	3050	176	1.72	3375	195	2.12	3675	213	2.64
21,384	900	2590	150	1.12	2950	170	1.60	3217	186	2.04	3500	202	2.52	3780	219	3.04
23,760	1000	2830	164	1.36	3130	181	1.88	3430	198	2.44	3650	211	2.96	3900	226	3.48
26,136	1100				3310	192	2.20	3590	208	2.88	3825	222	3.48	4050	234	4.00
28,512	1200				3540	205	2.72	3790	219	3.36	4050	234	4 00	4225	245	4.60
30,888	1300							3990	231	3.96	4220	244	4.60	4440	257	5.28
33,264	1400							4200	243	4.56	4420	256	5.28	4630	268	6.08
35,640	1500										4600	266	5.96	4800	278	6.80
38,016	1600										4750	275	6.56	4950	287	7.52
40,392	1700													5200	301	8.60
42,768	1800													5400	312	9.68
STATIC PRESSURE →		3/4″			7/8″			1″			1 1/4″			1 1/2″		
19,008	800	3950	228	3.20	4220	244	3.72	4480	259	4.24	4940	286	5.44	5370	311	6.80
21,384	900	4050	235	3.60	4290	249	4.16	4530	262	4.76	5000	290	6.04	5415	315	7.40
23,760	1000	4160	242	4.00	4400	255	4.68	4630	268	5.28	5075	294	6.64	5510	319	8.12
26,136	1100	4290	248	4.56	4520	262	5.20	4750	275	5.92	5170	299	7.28	5580	323	8.80
28,512	1200	4425	256	5.24	4650	269	5.88	4860	282	6 60	5260	305	8.00	5650	327	9.52
30,888	1300	4550	263	6.00	4780	277	6 64	4990	289	7.32	5390	312	8.80	5750	333	10.4
33,264	1400	4800	278	6.80	4980	288	7.48	5125	298	8.16	5520	320	9.60	5860	339	11.3
35,640	1500	4970	287	7.60	5180	300	8.40	5350	309	9.16	5640	327	10.6	5970	346	12.4
38,016	1600	5160	298	8.48	5380	312	9.44	5510	319	10.2	5800	335	11.9	6100	353	13.5
40,392	1700	5350	309	9.36	5540	321	10.4	5700	330	11.4	5990	347	13.2	6250	361	14.8
42,768	1800	5550	321	10.5	5710	331	11.5	5900	341	12.6	6200	359	14.7	6435	372	16.4
45,144	1900	5750	333	11.6	5920	342	12.6	6080	352	13.8	6390	370	16.0	6615	383	17.8
47,520	2000	5950	345	12.9	6080	352	13.8	6260	367	15.1	6560	380	17.3	6860	397	19.7
STATIC PRESSURE →		1 3/4″			2″			2 1/4″			2 1/2″			3″		
23,760	1000	5890	341	9.40	6240	361	10.9	6600	382	12.5	6910	400	14.1	7530	436	17.4
26,136	1100	5950	345	10.3	6290	364	11.8	6660	385	13.3	6970	403	15.1	7570	438	18.6
28,512	1200	6020	349	11.1	6370	369	12.7	6720	389	14.4	7030	407	16.2	7630	441	19 8
30,888	1300	6110	354	12.0	6455	374	13.6	6800	393	15.5	7100	411	17.3	7695	445	21.1
33,264	1400	6200	359	13.0	6550	379	14.8	6880	398	16.6	7180	415	18.6	7760	449	22.4
35,640	1500	6330	366	14.0	6635	384	16.0	6960	403	17.9	7260	420	19.7	7825	453	23.8
38,016	1600	6450	374	15.2	6750	391	17.3	7050	408	19.2	7350	425	21.2	7900	457	25.4
40,392	1700	6575	381	16.6	6865	398	18.5	7180	415	20.6	7450	431	22.7	7990	463	27.0
42,768	1800	6720	389	18.1	7000	405	20.0	7290	422	22.0	7560	438	24.2	8100	469	28.7
45,144	1900	6860	397	19.8	7140	413	21.6	7400	428	23.8	7680	445	25.8	8200	474	30.5
47,520	2000	7080	409	21.6	7300	422	23.6	7560	437	25.8	7800	451	27.8	8320	482	32.4
52,272	2200	7450	431	25.2	7650	443	27.6	7920	458	29.9	8100	469	32.2	8580	497	36.8
57,024	2400	7800	452	30.0	8100	469	31.6	8250	478	34.6	8450	489	37.2	8850	512	42.0

All published ratings based on air at 70° F and 29.92″ barometric pressure, and on tests in accordance with N.A.F.M. test code.

All published ratings based on air at 70° F and 29.92" barometric pressure, and on tests in accordance with N.A.F.M. test code.

TABLE 50

No. 15 DOUBLE WIDTH DOUBLE INLET FAN — TYPE BI

Max. HP = $.39 \left(\frac{RPM}{1000}\right)^3$

CIRCUM. = 3.93′ WHEEL DIA. 15″ OUTLET AREA = 2.18 SQ. FT.

STATIC PRESSURE →		1/8"			1/4"			3/8"			1/2"			5/8"		
CFM	OUTLET VEL.	Tip Speed	RPM	HP	Tip Speed	RPM	HP	Tip Speed	RPM	HP	Tip Speed	RPM	HP	Tip Speed	RPM	HP
1309	600	1970	501	.05	2415	614	.08	2780	708	.11	3125	795	.15	3455	878	.20
1525	700	2150	548	.06	2560	651	.10	2905	739	.14	3215	819	.18	3515	894	.23
1745	800	2340	595	.08	2710	690	.12	3050	776	.17	3345	851	.21	3630	925	.26
1962	900	2540	646	.10	2860	728	.14	3190	811	.20	3490	888	.24	3770	959	.30
2180	1000	2750	700	.13	3070	782	.17	3345	851	.23	3640	927	.28	3910	998	.35
2400	1100				3255	828	.21	3520	895	.27	3790	965	.33	4055	1032	.40
2618	1200				3445	877	.26	3700	942	.31	3945	1004	.38	4195	1067	.45
2835	1300							3900	993	.36	4120	1049	.44	4350	1107	.51
3050	1400							4105	1045	.42	4310	1098	.50	4505	1147	.57
3270	1500										4500	1145	.57	4680	1190	.65
3490	1600										4690	1192	.65	4875	1240	.72
3708	1700													5065	1289	.80
3925	1800													5255	1337	.89
STATIC PRESSURE →		3/4"			7/8"			1"			1 1/4"			1 1/2"		
1745	800	3890	991	.31	4145	1055	.37	4405	1121	.43	4875	1240	.56	5300	1349	.71
1962	900	4025	1026	.35	4215	1073	.41	4450	1127	.46	4915	1250	.60	5340	1360	.75
2180	1000	4170	1061	.40	4345	1106	.45	4560	1160	.51	4990	1270	.65	5390	1371	.80
2400	1100	4295	1093	.46	4475	1133	.51	4685	1191	.57	5070	1291	.71	5460	1390	.81
2618	1200	4430	1122	.52	4610	1174	.58	4830	1229	.64	5220	1329	.78	5560	1415	.92
2835	1300	4560	1160	.58	4760	1212	.65	4975	1266	.72	5340	1360	.86	5675	1445	1.01
3050	1400	4710	1202	.65	4915	1250	.72	5125	1304	.80	5480	1395	.95	5815	1480	1.11
3270	1500	4865	1238	.72	5075	1292	.80	5265	1357	.88	5630	1433	1.05	5955	1515	1.22
3490	1600	5040	1282	.80	5235	1332	.88	5420	1379	.97	5775	1470	1.15	6095	1550	1.33
3708	1700	5225	1330	.89	5410	1378	.98	5585	1421	1.07	5930	1509	1.26	6235	1589	1.44
3925	1800	5420	1380	.99	5595	1424	1.08	5760	1466	1.18	6085	1548	1.33	6380	1624	1.56
4145	1900	5615	1429	1.10	5795	1475	1.20	5945	1513	1.31	6240	1588	1.50	6520	1660	1.70
4360	2000	5840	1485	1.22	5995	1526	1.33	6130	1560	1.45	6405	1630	1.65	6690	1702	1.85
STATIC PRESSURE →		1 3/4"			2"			2 1/4"			2 1/2"			3"		
2180	1000	5800	1476	.96	6160	1567	1.12	6500	1655	1.30	6850	1745	1.46	7470	1901	1.82
2400	1100	5830	1483	1.03	6195	1577	1.19	6535	1664	1.37	6880	1751	1.53	7500	1908	1.91
2618	1200	5900	1501	1.10	6250	1590	1.26	6590	1676	1.45	6915	1759	1.62	7535	1917	2.01
2835	1300	6015	1531	1.18	6325	1609	1.34	6660	1695	1.53	6960	1771	1.72	7575	1927	2.12
3050	1400	6140	1562	1 28	6425	1635	1.44	6745	1716	1.64	7030	1787	1.83	7620	1939	2.23
3270	1500	6275	1596	1.39	6545	1666	1.57	6845	1744	1.77	7135	1815	1.95	7695	1958	2.36
3490	1600	6420	1634	1.51	6690	1702	1.70	6965	1772	1.90	7260	1847	2.09	7780	1980	2.51
3708	1700	6565	1671	1.64	6840	1743	1.84	7105	1808	2.04	7395	1882	2.24	7895	2009	2.67
3925	1800	6710	1711	1.71	6985	1776	1.98	7255	1846	2.19	7535	1917	2.40	8050	2049	2.84
4145	1900	6860	1748	1.90	7130	1814	2.12	7405	1884	2.35	7680	1954	2.56	8200	2087	3.03
4360	2000	7010	1782	2.07	7275	1851	2.28	7555	1922	2.51	7820	1990	2.75	8340	2122	3.22
4800	2200	7330	1865	2.40	7580	1928	2.62	7845	1996	2.86	8110	2063	3.11	8610	2191	3.63
5235	2400	7660	1949	2.77	7895	2009	3.01	8140	2071	3.28	8395	2137	3.54	8860	2254	4.08

TABLE 51

No. 18 DOUBLE WIDTH DOUBLE INLET FAN — TYPE BI

Max. HP = $.96 \left(\frac{RPM}{1000}\right)^3$

CIRCUM. = 4.71′ WHEEL DIA. 18″ OUTLET AREA = 3.12 SQ. FT.

STATIC PRESSURE →		1/8"			1/4"			3/8"			1/2"			5/8"		
CFM	OUTLET VEL.	Tip Speed	RPM	HP	Tip Speed	RPM	HP	Tip Speed	RPM	HP	Tip Speed	RPM	HP	Tip Speed	RPM	HP
1872	600	1970	419	.07	2415	512	.11	2780	590	.16	3125	663	.22	3455	734	.29
2184	700	2150	457	.09	2560	544	.14	2905	617	.20	3215	682	.26	3515	747	.33
2496	800	2340	498	.11	2710	576	.17	3050	647	.24	3345	710	.30	3630	771	.37
2808	900	2540	540	.14	2860	612	.21	3190	677	.28	3490	741	.35	3770	800	.43
3120	1000	2750	584	.18	3070	651	.25	3345	710	.33	3640	772	.41	3910	830	.50
3432	1100				3255	691	.30	3520	747	.39	3790	804	.47	4055	861	.57
3744	1200				3445	732	.36	3700	786	.45	3945	838	.54	4195	891	.64
4056	1300							3900	828	.52	4120	875	.63	4350	923	.73
4368	1400							4105	871	.61	4310	915	.72	4505	957	.82
4680	1500										4500	956	.82	4680	994	.93
4992	1600										4690	996	.93	4875	1035	1.04
5304	1700													5065	1075	1.16
5616	1800													5255	1116	1.29
STATIC PRESSURE →		3/4"			7/8"			1"			1 1/4"			1 1/2"		
2496	800	3890	826	.44	4145	880	.53	4405	935	.62	4875	1035	.81	5300	1125	1.02
2808	900	4025	855	.50	4215	895	.58	4450	945	.67	4915	1044	.87	5340	1134	1.08
3120	1000	4170	887	.58	4345	922	.65	4560	968	.74	4990	1059	.94	5390	1144	1.15
3432	1100	4295	914	.66	4475	950	.74	4685	995	.82	5070	1076	1.02	5460	1159	1.23
3744	1200	4430	941	.74	4610	979	.83	4830	1025	.92	5220	1108	1.12	5560	1180	1.33
4056	1300	4560	968	.83	4760	1010	.93	4975	1056	1.03	5340	1134	1.24	5675	1205	1.45
4368	1400	4710	1000	.93	4915	1044	1.04	5125	1088	1.15	5480	1164	1.37	5815	1234	1.59
4680	1500	4865	1033	1.04	5075	1077	1.15	5265	1118	1.27	5630	1195	1.51	5955	1264	1.75
4992	1600	5040	1071	1.15	5235	1112	1.27	5420	1151	1.40	5775	1226	1.66	6095	1294	1.91
5304	1700	5225	1110	1.28	5410	1149	1.41	5585	1186	1.54	5930	1259	1.81	6235	1324	2.07
5616	1800	5420	1149	1.42	5595	1188	1.56	5760	1223	1.70	6085	1292	1.98	6380	1354	2.25
5928	1900	5615	1192	1.58	5795	1230	1.73	5945	1262	1.88	6240	1325	2.16	6520	1384	2.45
6240	2000	5840	1240	1.76	5995	1273	1.92	6130	1302	2.08	6405	1360	2.37	6690	1420	2.66
STATIC PRESSURE →		1 3/4"			2"			2 1/4"			2 1/2"			3"		
3120	1000	5800	1231	1.39	6160	1308	1.62	6500	1380	1.87	6850	1454	2.11	7470	1586	2.63
3432	1100	5830	1238	1.48	6195	1315	1.71	6535	1387	1.97	6880	1461	2.21	7500	1592	2.76
3744	1200	5900	1253	1.58	6250	1327	1.81	6590	1399	2.09	6915	1468	2.34	7535	1600	2.90
4056	1300	6015	1275	1.70	6325	1343	1.93	6660	1414	2.21	6960	1478	2.48	7575	1608	3.05
4368	1400	6140	1304	1.84	6425	1364	2.08	6745	1435	2.37	7030	1493	2.63	7620	1618	3.22
4680	1500	6275	1332	2.00	6545	1390	2.26	6845	1453	2.55	7135	1515	2.81	7695	1633	3.41
4992	1600	6420	1363	2.18	6690	1420	2.45	6965	1479	2.74	7260	1542	3.01	7780	1652	3.62
5304	1700	6565	1394	2.36	6840	1452	2.65	7105	1509	2.94	7395	1570	3.23	7895	1676	3.85
5616	1800	6710	1425	2.56	6985	1483	2.85	7255	1540	3.15	7535	1600	3.46	8050	1710	4.10
5928	1900	6860	1456	2.77	7130	1514	3.06	7405	1572	3.38	7680	1630	3.70	8200	1745	4.37
6240	2000	7010	1488	2.98	7275	1545	3.29	7555	1604	3.62	7820	1660	3.96	8340	1774	4.64
6864	2200	7330	1556	3.46	7580	1609	3.78	7845	1666	4.12	8110	1722	4.49	8610	1828	5.23
7488	2400	7660	1626	3.99	7895	1676	4.34	8140	1728	4.72	8395	1782	5.10	8860	1882	5 88

All published ratings based on air at 70° F. and 29.92"barometric pressure, and on tests in accordance with N.A.F.M. test code.

BI – DWDI

BI – DWDI

TABLE 52

No. 21 DOUBLE WIDTH DOUBLE INLET FAN — TYPE BI

$$\text{Max. HP} = 2.1\left(\frac{\text{RPM}}{1000}\right)^3$$

CIRCUM. = 5.5′ WHEEL DIA. 21″ OUTLET AREA = 4.25 SQ. FT.

STATIC PRESSURE →		⅛″			¼″			⅜″			½″			⅝″		
CFM	OUTLET VEL.	Tip Speed	RPM	HP	Tip Speed	RPM	HP	Tip Speed	RPM	HP	Tip Speed	RPM	HP	Tip Speed	RPM	HP
2550	600	1970	358	.09	2415	439	.15	2780	505	.22	3125	568	.30	3455	628	.39
2975	700	2150	391	12	2560	466	.19	2905	528	.27	3215	585	.35	3515	639	.45
3400	800	2340	425	.15	2710	493	.23	3050	555	.32	3345	610	.41	3630	660	.50
3825	900	2540	462	.19	2860	520	.28	3190	580	.38	3490	634	.48	3770	686	.58
4250	1000	2750	500	.24	3070	558	.34	3345	610	.45	3640	662	.56	3910	711	.68
4675	1100				3255	592	.41	3520	640	.53	3790	689	.64	4055	737	.78
5100	1200				3445	626	.48	3700	672	.61	3945	717	73	4195	763	.87
5525	1300							3900	709	.71	4120	750	.85	4350	791	.99
5950	1400							4105	746	.83	4310	783	.98	4505	820	1 02
6375	1500										4500	819	1.02	4680	851	1.27
6800	1600										4690	853	1.27	4875	886	1.41
7225	1700													5065	921	1.58
7650	1800													5255	954	1.75
STATIC PRESSURE →		¾″			⅞″			1″			1 ¼″			1 ½″		
3400	800	3890	708	.60	4145	753	.72	4405	801	.84	4875	887	1.10	5300	964	1.39
3825	900	4025	731	.68	4215	767	.79	4450	809	.91	4915	894	1.18	5340	971	1.47
4250	1000	4170	758	.79	4345	790	.88	4560	831	1.01	4990	908	1.28	5390	980	1.56
4675	1100	4295	781	.90	4475	814	1.01	4685	852	1.12	5070	921	1.39	5460	993	1.67
5100	1200	4430	806	1.01	4610	838	1.13	4830	878	1.25	5220	949	1.52	5560	1011	1.81
5525	1300	4560	831	1.13	4760	865	1.27	4975	905	1.40	5340	971	1.69	5675	1033	1.97
5950	1400	4710	856	1.27	4915	893	1.41	5125	931	1.56	5480	996	1.86	5815	1058	2.16
6375	1500	4865	885	1.41	5075	922	1.56	5265	956	1.73	5630	1025	2.05	5955	1083	2.38
6800	1600	5040	917	1.56	5235	971	1.73	5420	986	1.90	5775	1051	2.26	6095	1108	2.60
7225	1700	5225	950	1.74	5410	984	1.92	5585	1016	2.09	5930	1078	2.46	6235	1134	2.82
7650	1800	5420	986	1.93	5595	1017	2.12	5760	1048	2.31	6085	1106	2.69	6380	1160	3.06
8075	1900	5615	1022	2.15	5795	1054	2.35	5945	1081	2.55	6240	1135	2.94	6520	1186	3.33
8500	2000	5840	1062	2.39	5995	1091	2.61	6130	1114	2.83	6405	1164	3.22	6690	1216	3.62
STATIC PRESSURE →		1 ¾″			2″			2 ¼″			2 ½″			3″		
4250	1000	5800	1055	1.89	6160	1120	2.20	6500	1182	2.54	6850	1245	2.87	7470	1358	3.58
4675	1100	5830	1060	2.01	6195	1126	2.33	6535	1189	2.68	6880	1251	3.01	7500	1364	3.76
5100	1200	5900	1073	2.15	6250	1137	2.46	6590	1198	2.84	6915	1257	3.18	7535	1370	3.95
5525	1300	6015	1094	2.31	6325	1150	2.62	6660	1211	3.01	6960	1265	3.37	7575	1377	4.15
5950	1400	6140	1116	2.50	6425	1168	2.83	6745	1227	3.23	7030	1278	3.58	7620	1385	4.37
6375	1500	6275	1142	2.72	6545	1189	3.07	6845	1244	3.47	7135	1297	3.82	7695	1399	4.63
6800	1600	6420	1167	2.96	6690	1216	3.33	6965	1266	3.73	7260	1320	4.10	7780	1415	4.92
7225	1700	6565	1193	3.21	6840	1243	3.60	7105	1292	4 00	7395	1344	4 40	7895	1435	5 24
7650	1800	6710	1220	3.48	6985	1269	3.88	7255	1319	4.29	7535	1370	4.71	8050	1464	5.58
8075	1900	6860	1247	3.77	7130	1296	4.16	7405	1346	4.60	7680	1396	5.03	8200	1491	5 95
8500	2000	7010	1274	4.05	7275	1323	4.47	7555	1373	4.92	7820	1422	5.38	8340	1516	6.31
9350	2200	7330	1333	4.70	7580	1378	5.14	7845	1427	5.60	8110	1475	6.11	8610	1565	7.11
10,200	2400	7660	1392	5.43	7895	1435	5.90	8140	1480	6.42	8395	1526	6.94	8860	1611	8.00

TABLE 53

No. 24 DOUBLE WIDTH DOUBLE INLET FAN — TYPE BI

$$\text{Max. HP} = 4.1\left(\frac{\text{RPM}}{1000}\right)^3$$

CIRCUM. = 6.283′ WHEEL DIA. 24″ OUTLET AREA = 6.05 SQ. FT.

STATIC PRESSURE →		⅛″			¼″			⅜″			½″			⅝″		
CFM	OUTLET VEL.	Tip Speed	RPM	HP	Tip Speed	RPM	HP	Tip Speed	RPM	HP	Tip Speed	RPM	HP	Tip Speed	RPM	HP
3,630	600	1975	314	.13	2390	380	.21	2770	441	.30	3130	498	.41	3460	551	.54
4,230	700	2160	344	.17	2535	403	26	2885	459	.36	3220	512	.47	3520	560	.60
4,840	800	2375	378	.22	2700	430	.32	3015	480	.43	3335	531	.54	3610	575	.67
5,445	900	2560	407	.28	2885	459	.40	3180	506	.51	3470	552	.63	3725	593	.76
6,050	1000	2800	446	.35	3075	489	.48	3350	533	.61	3610	575	.74	3865	615	.88
6,655	1100				3270	520	.57	3530	562	.72	3775	601	.86	4015	639	1.02
7,260	1200				3460	551	.68	3720	592	.84	3950	629	1.00	4175	664	1.17
7,865	1300							3920	624	.99	4130	657	1.14	4340	691	1.33
8,460	1400							4120	656	1.15	4320	688	1.32	4520	719	1.52
9,065	1500										4530	721	1.52	4710	750	1.72
9,680	1600										4750	756	1.75	4900	780	1.95
10,285	1700													5100	812	2.20
10,890	1800													5310	845	2.47
STATIC PRESSURE →		¾″			⅞″			1″			1 ¼″			1 ½″		
4,840	800	3890	619	.81	4150	661	.96	4400	700	1.12	4860	774	1.47	5280	840	1.85
5,445	900	3990	635	.91	4220	672	1.06	4450	708	1.22	4910	781	1.58	5330	848	1.98
6,050	1000	4110	655	1.03	4330	689	1.19	4530	721	1.34	4980	793	1.70	5400	859	2.12
6,655	1100	4240	675	1.17	4450	708	1.33	4650	740	1.49	5075	808	1.85	5470	871	2.27
7,260	1200	4380	697	1.33	4580	729	1.48	4780	761	1.66	5170	823	2.03	5550	883	2.44
7,865	1300	4520	718	1.50	4720	751	1 66	4920	783	1.85	5290	842	2.23	5650	899	2 63
8,460	1400	4680	745	1.68	4880	777	1.87	5070	807	2.08	5425	863	2.46	5770	918	2.86
9,065	1500	4855	773	1.90	5050	804	2.10	5230	832	2.32	5580	888	2.72	5890	937	3.12
9,680	1600	5050	804	2.13	5230	832	2.34	5400	859	2.58	5740	914	3.00	6030	960	3.41
10,285	1700	5250	836	2.37	5410	861	2.62	5580	888	2.86	5910	941	3.30	6190	985	3.74
10,890	1800	5450	867	2.66	5600	891	2.92	5770	918	3 17	6090	969	3.64	6360	1012	4.11
11,495	1900	5655	900	2.95	5810	925	3.24	5960	949	3.50	6275	999	4.00	6550	1039	4.50
12,100	2000	5860	933	3.32	6040	961	3.58	6150	979	3.85	6430	1023	4.38	6700	1066	4.90
STATIC PRESSURE →		1 ¾″			2″			2 ¼″			2 ½″			3″		
6,050	1000	5790	922	2.54	6150	979	2.95	6490	1033	3.42	6820	1085	3.85	7470	1189	4.92
6,655	1100	5850	931	2.66	6200	987	3.12	6540	1041	3.62	6865	1093	4.05	7480	1191	5.12
7,260	1200	5920	942	2.84	6260	996	3.31	6600	1050	3.81	6920	1101	4.29	7520	1197	5.35
7,865	1300	6005	956	3.06	6345	1010	3.51	6680	1063	4.00	6975	1110	4.55	7570	1205	5.60
8,460	1400	6110	972	3.31	6440	1025	3.75	6780	1079	4.22	7040	1120	4.80	7630	1214	5.87
9,065	1500	6230	992	3.58	6550	1042	4.03	6880	1095	4.53	7120	1133	5.06	7700	1226	6.15
9,680	1600	6360	1012	3.88	6670	1062	4.34	6980	1111	4.86	7220	1149	5.36	7780	1238	6 48
10,285	1700	6500	1035	4.22	6800	1082	4.68	7090	1128	5.21	7320	1165	5.68	7870	1253	6.87
10,890	1800	6650	1058	4.60	6940	1105	5.06	7210	1148	5.58	7450	1186	6.06	7980	1270	7.30
11,495	1900	6800	1082	5.00	7080	1127	5.49	7340	1168	6.00	7590	1208	6.50	8100	1289	7.75
12,100	2000	6960	1108	5.44	7220	1149	5.95	7480	1191	6.50	7730	1230	7.05	8220	1308	8.25
13,310	2200	7300	1162	6.38	7550	1202	6.95	7800	1241	7 55	8030	1278	8.16	8480	1350	9.35
14,520	2400	7650	1218	7 35	7890	1256	8.00	8120	1292	8 65	8340	1327	9.30	8760	1394	10.6

All published ratings based on air at 70° F. and 29.92″ barometric pressure, and on tests in accordance with N.A.F.M. test code

TABLE 54

No. 27 DOUBLE WIDTH DOUBLE INLET FAN — TYPE BI

$$\text{Max. HP} = 7.4\left(\frac{\text{RPM}}{1000}\right)^3$$

CIRCUM. = 7.07′ WHEEL DIA. 27″ OUTLET AREA = 7.50 SQ. FT.

STATIC PRESSURE →		1/8"			1/4"			3/8"			1/2"			5/8"		
CFM	OUTLET VEL.	Tip Speed	RPM	HP	Tip Speed	RPM	HP	Tip Speed	RPM	HP	Tip Speed	RPM	HP	Tip Speed	RPM	HP
4,500	600	1975	280	.17	2390	338	.27	2770	392	.38	3130	443	.52	3460	489	.68
5,250	700	2160	306	.22	2535	358	.33	2885	408	.46	3220	455	.60	3520	498	.76
6,000	800	2375	336	.28	2700	382	.41	3015	427	.54	3335	472	.69	3610	511	.85
6,750	900	2560	362	.35	2885	407	.51	3180	449	.64	3470	491	.80	3725	528	.96
7,500	1000	2800	396	.44	3075	435	.61	3350	474	.77	3610	511	.94	3865	547	1.12
8,250	1100				3270	462	.72	3530	500	.91	3775	534	1.10	4015	567	1.29
9,000	1200				3460	489	.86	3720	527	1.07	3950	559	1.26	4175	589	1.47
9,750	1300							3920	555	1.25	4130	584	1.44	4340	614	1.69
10,500	1400							4120	583	1.45	4320	611	1.65	4520	639	1.92
11,250	1500										4530	641	1.92	4710	666	2.18
12,000	1600										4750	672	2.22	4900	693	2.46
12,750	1700													5100	721	2.78
13,500	1800													5310	751	3.12
STATIC PRESSURE →		3/4"			7/8"			1"			1 1/4"			1 1/2"		
6,000	800	3890	550	1.02	4150	587	1.23	4400	622	1.43	4860	687	1.86	5280	747	2.33
6,750	900	3990	564	1.15	4220	597	1.34	4450	629	1.54	4910	694	2.01	5330	754	2.50
7,500	1000	4110	581	1.30	4330	612	1.51	4530	641	1.70	4980	704	2.15	5400	764	2.66
8,250	1100	4240	600	1.48	4450	629	1.68	4650	658	1.89	5075	718	2.33	5470	774	2.84
9,000	1200	4380	620	1.68	4580	648	1.87	4780	676	2.09	5170	731	2.57	5550	785	3.05
9,750	1300	4520	639	1.89	4720	668	2.10	4920	696	2.34	5290	748	2.85	5650	799	3.33
10,500	1400	4680	662	2.14	4880	690	2.37	5070	717	2.63	5425	767	3.10	5770	816	3.62
11,250	1500	4855	687	2.40	5050	714	2.66	5230	740	2.94	5580	789	3.43	5890	833	3.95
12,000	1600	5050	714	2.68	5230	740	2.96	5400	764	3.26	5740	812	3.80	6030	853	4.31
12,750	1700	5250	743	3.00	5410	765	3.32	5580	789	3.62	5910	836	4.18	6190	876	4.73
13,500	1800	5450	771	3.36	5600	792	3.70	5770	816	4.00	6090	861	4.59	6360	900	5.19
14,250	1900	5655	800	3.74	5810	822	4.10	5960	843	4.42	6275	888	5.02	6530	924	5.70
15,000	2000	5860	829	4.20	6040	854	4.53	6150	870	4.87	6430	909	5.49	6700	948	6.20
STATIC PRESSURE →		1 3/4"			2"			2 1/4"			2 1/2"			3"		
7,500	1000	5790	819	3.20	6150	870	3.72	6490	918	4.32	6820	965	4.85	7470	1057	6.23
8,250	1100	5850	828	3.37	6200	877	3.95	6540	925	4.57	6865	971	5.10	7480	1058	6.41
9,000	1200	5920	837	3.59	6260	885	4.19	6600	934	4.82	6920	979	5.44	7520	1064	6.70
9,750	1300	6005	849	3.87	6345	897	4.44	6680	945	5.06	6975	987	5.76	7570	1071	7.06
10,500	1400	6110	864	4.19	6440	911	4.75	6780	959	5.34	7040	996	6.07	7630	1079	7.42
11,250	1500	6230	881	4.53	6550	926	5.10	6880	973	5.74	7120	1007	6.40	7700	1089	7.79
12,000	1600	6360	900	4.91	6670	943	5.50	6980	987	6.16	7220	1021	6.78	7780	1100	8.20
12,700	1700	6500	919	5.46	6800	962	5.92	7090	1003	6.60	7320	1035	7.19	7870	1113	8.69
13,500	1800	6650	941	5.83	6940	982	6.40	7210	1020	7.06	7450	1054	7.66	7980	1129	9.25
14,250	1900	6800	962	6.34	7080	1001	6.93	7340	1038	7.58	7590	1074	8.21	8100	1146	9.81
15,000	2000	6960	984	6.89	7220	1021	7.53	7480	1058	8.23	7730	1093	8.93	8220	1163	10.4
16,500	2200	7300	1033	8.05	7550	1068	8.80	7800	1103	9.56	8030	1136	10.3	8480	1199	11.8
18,000	2400	7650	1082	9.40	7890	1116	10.1	8120	1149	10.9	8340	1180	11.7	8760	1239	13.4

TABLE 55

No. 30 DOUBLE WIDTH DOUBLE INLET FAN — TYPE BI

$$\text{Max. HP} = 12.5\left(\frac{\text{RPM}}{1000}\right)^3$$

CIRCUM. = 7.85′ WHEEL DIA. 30″ OUTLET AREA = 9.25 SQ. FT.

STATIC PRESSURE →		1/8"			1/4"			3/8"			1/2"			5/8"		
CFM	OUTLET VEL.	Tip Speed	RPM	HP	Tip Speed	RPM	HP	Tip Speed	RPM	HP	Tip Speed	RPM	HP	Tip Speed	RPM	HP
5,550	600	1975	252	.20	2390	304	.33	2770	353	.47	3130	399	.64	3460	441	.84
6,475	700	2160	275	.27	2535	322	.41	2885	368	.56	3220	410	.73	3520	447	.94
7,400	800	2375	302	.35	2700	344	.50	3015	384	.67	3335	425	.84	3610	460	1.05
8,325	900	2560	326	.44	2885	368	.62	3180	405	.80	3470	442	.98	3725	476	1.18
9,250	1000	2800	357	.65	3075	392	.75	3350	427	.95	3610	460	1.15	3865	493	1.37
10,175	1100				3270	416	.89	3530	450	1.12	3775	481	1.34	4015	512	1.59
11,100	1200				3460	441	1.06	3720	474	1.31	3950	503	1.56	4175	532	1.82
12,025	1300							3920	500	1.54	4130	527	1.78	4340	552	2.08
12,950	1400							4120	525	1.80	4320	551	2.05	4520	576	2.37
13,875	1500										4530	577	2.37	4710	600	2.69
14,800	1600										4750	605	2.73	4900	625	3.04
15,725	1700													5100	650	3.43
16,650	1800													5310	677	3.85
STATIC PRESSURE →		3/4"			7/8"			1"			1 1/4"			1 1/2"		
7,400	800	3890	496	1.26	4150	529	1.49	4400	561	1.75	4860	619	2.30	5280	673	2.88
8,325	900	3990	508	1.42	4220	538	1.65	4450	567	1.91	4910	625	2.46	5330	679	3.09
9,250	1000	4110	523	1.61	4330	552	1.86	4530	577	2.09	4980	634	2.65	5400	688	3.31
10,175	1100	4240	540	1.83	4450	567	2.08	4650	592	2.32	5075	646	2.89	5470	697	3.54
11,100	1200	4380	558	2.07	4580	583	2.32	4780	609	2.59	5170	659	3.17	5550	707	3.81
12,025	1300	4520	576	2.34	4720	601	2.59	4920	627	2.89	5290	674	3.48	5650	720	4.11
12,950	1400	4680	596	2.63	4880	622	2.92	5070	646	3.24	5425	691	3.84	5770	735	4.47
13,875	1500	4855	618	2.97	5050	643	3.28	5230	666	3.62	5580	711	4.25	5890	750	4.87
14,800	1600	5050	643	3.33	5230	666	3.66	5400	688	4.03	5740	731	4.68	6030	768	5.32
15,725	1700	5250	669	3.70	5410	689	4.09	5580	711	4.46	5910	753	5.16	6190	789	5.84
16,650	1800	5450	694	4.15	5600	713	4.56	5770	735	4.95	6090	776	5.68	6360	810	6.42
17,575	1900	5655	720	4.62	5810	740	5.06	5960	759	5.47	6275	799	6.24	6530	832	7.03
18,500	2000	5860	746	5.19	6040	769	5.60	6150	783	6.01	6430	819	6.84	6700	854	7.65
STATIC PRESSURE →		1 3/4"			2"			2 1/4"			2 1/2"			3"		
9,250	1000	5790	738	3.96	6150	783	4.62	6490	827	5.34	6820	869	6.02	7470	952	7.70
10,175	1100	5850	745	4.15	6200	790	4.87	6540	833	5.65	6865	875	6.33	7480	953	8.00
11,100	1200	5920	754	4.43	6260	797	5.17	6600	841	5.95	6920	882	6.70	7520	958	8.35
12,025	1300	6005	765	4.77	6345	808	5.49	6680	851	6.25	6975	889	7.10	7570	964	8.74
12,950	1400	6110	778	5.16	6440	820	5.86	6780	864	6.60	7040	897	7.51	7630	972	9.16
13,875	1500	6230	794	5.59	6550	834	6.30	6880	876	7.08	7120	907	7.93	7700	981	9.60
14,800	1600	6360	810	6.06	6670	850	6.79	6980	889	7.60	7220	920	8.38	7780	991	10.1
15,725	1700	6500	828	6.59	6800	866	7.31	7090	903	8.15	7320	932	8.86	7870	1003	10.7
16,650	1800	6650	847	7.17	6940	884	7.90	7210	918	8.72	7450	949	9.48	7980	1017	11.4
17,575	1900	6800	866	7.80	7080	902	8.57	7340	935	9.37	7590	967	10.2	8100	1032	12.1
18,500	2000	6960	887	8.50	7220	920	9.30	7480	953	10.2	7730	985	11.0	8220	1047	12.9
20,350	2200	7300	930	9.95	7550	962	10.9	7800	994	11.8	8030	1023	12.7	8480	1080	14.6
22,200	2400	7650	975	11.5	7890	1005	12.5	8120	1034	13.5	8340	1062	14.5	8760	1116	16.5

BI – DWDI

TABLE 56

No. 33 DOUBLE WIDTH DOUBLE INLET FAN — TYPE BI

$$\text{Max. HP} = 20.2\left(\frac{\text{RPM}}{1000}\right)^3$$

CIRCUM. = 8.65′ WHEEL DIAM. 33″ OUTLET AREA = 11.00 SQ. FT.

STATIC PRESSURE ➤		⅛″			¼″			⅜″			½″			⅝″		
CFM	OUTLET VEL.	Tip Speed	RPM	HP	Tip Speed	RPM	HP	Tip Speed	RPM	HP	Tip Speed	RPM	HP	Tip Speed	RPM	HP
6,600	600	1975	228	.25	2390	276	.40	2770	320	.57	3130	362	.77	3460	400	1.02
7,700	700	2160	250	.32	2535	293	.49	2885	332	.68	3220	373	.89	3520	407	1.13
8,800	800	2375	275	.42	2700	312	.61	3015	348	.81	3335	386	1.02	3610	418	1.27
9,900	900	2560	296	.53	2885	334	.76	3180	368	.97	3470	401	1.19	3725	430	1.44
11,000	1000	2800	324	.66	3075	356	.91	3350	387	1.15	3610	417	1.40	3865	446	1.66
12,100	1100				3270	378	1.08	3530	408	1.36	3775	436	1.62	4015	463	1.93
13,200	1200				3460	400	1.28	3720	430	1.59	3950	456	1.89	4175	482	2.21
14,300	1300							3920	453	1.87	4130	478	2.16	4340	502	2.52
15,400	1400							4120	476	2.18	4320	499	2.50	4520	522	2.88
16,500	1500										4530	523	2.88	4710	544	3.25
17,600	1600										4750	550	3.31	4900	566	3.69
18,700	1700													5100	580	4.16
19,800	1800													5310	613	4.67
STATIC PRESSURE ➤		¾″			⅞″			1″			1 ¼″			1 ½″		
8,800	800	3890	450	1.53	4150	479	1.81	4400	508	2.12	4360	562	2.78	5280	610	3.50
9,900	900	3990	462	1.72	4220	487	2.00	4450	515	2.31	4910	567	2.99	5330	616	3.74
11,000	1000	4110	475	1.95	4330	500	2.25	4530	524	2.53	4980	575	3.21	5400	624	4.00
12,100	1100	4240	490	2.21	4450	514	2.52	4650	538	2.82	5075	586	3.50	5470	632	4.30
13,200	1200	4380	506	2.52	4580	528	2.80	4780	553	3.14	5170	597	3.84	5550	642	4.62
14,300	1300	4520	522	2.82	4720	545	3.14	4920	568	3.50	5290	612	4.22	5650	654	4.97
15,400	1400	4680	541	3.18	4880	564	3.54	5070	585	3.94	5425	627	4.65	5770	668	5.41
16,500	1500	4855	561	3.59	5050	584	3.98	5230	604	4.38	5580	645	5.14	5890	682	5.90
17,600	1600	5050	584	4.03	5230	605	4.43	5400	624	4.88	5740	664	5.67	6030	698	6.45
18,700	1700	5250	607	4.49	5410	625	4.96	5580	645	5.40	5910	683	6.24	6190	715	7.08
19,800	1800	5450	630	5.03	5600	647	5.52	5770	666	6.00	6090	704	6.88	6360	735	7.78
20,900	1900	5655	654	5.58	5810	672	6.13	5960	688	6.62	6275	725	7.57	6530	756	8.52
22,000	2000	5860	678	6.29	6040	699	6.78	6150	710	7.29	6430	744	8.30	6700	777	9.28
STATIC PRESSURE ➤		1 ¾″			2″			2 ¼″			2 ½″			3″		
11,000	1000	5790	670	4.80	6150	710	5.58	6490	751	6.47	6820	788	7.29	7470	864	9.31
12,100	1100	5850	677	5.03	6200	716	5.90	6540	756	6.85	6865	793	7.66	7480	865	9.70
13,200	1200	5920	684	5.37	6260	723	6.26	6600	763	7.21	6920	799	8.12	7520	870	10.1
14,300	1300	6005	700	5.79	6345	733	6.64	6680	772	7.57	6975	806	8.61	7570	875	10.6
15,400	1400	6110	706	6.26	6440	745	7.10	6780	784	8.00	7040	814	9.09	7630	882	11.1
16,500	1500	6230	720	6.78	6550	757	7.62	6880	796	8.57	7120	823	9.60	7700	890	11.6
17,600	1600	6360	735	7.35	6670	771	8.40	6980	807	9.20	7220	835	10.1	7780	900	12.2
18,700	1700	6500	752	8.00	6800	786	8.86	7090	820	9.85	7320	846	10.7	7870	910	13.0
19,800	1800	6650	769	8.70	6940	803	9.57	7210	834	10.5	7450	861	11.5	7980	923	13.8
20,900	1900	6800	786	9.47	7080	819	10.4	7340	849	11.3	7590	877	12.3	8100	936	14.6
22,000	2000	6960	805	10.3	7220	835	11.2	7480	865	12.3	7730	894	13.3	8220	950	15.6
24,200	2200	7300	845	12.1	7550	873	13.1	7800	902	14.3	8030	928	15.4	8480	980	17.7
26,400	2400	7650	884	13.9	7890	912	15.1	8120	938	16.3	8340	964	17.6	8760	1010	20.0

TABLE 57

No. 36 DOUBLE WIDTH DOUBLE INLET FAN — TYPE BI

$$\text{Max. HP} = 31.2\left(\frac{\text{RPM}}{1000}\right)^3$$

CIRCUM. = 9.42′ WHEEL DIA. 36″ OUTLET AREA = 13.6 SQ. FT.

STATIC PRESSURE ➤		⅛″			¼″			⅜″			½″			⅝″		
CFM	OUTLET VEL.	Tip Speed	RPM	HP	Tip Speed	RPM	HP	Tip Speed	RPM	HP	Tip Speed	RPM	HP	Tip Speed	RPM	HP
8,160	600	1975	210	.29	2390	254	.47	2770	294	.68	3130	332	.92	3460	367	1.22
9,520	700	2160	229	.38	2535	269	.59	2885	306	.81	3220	341	1.06	3520	373	1.35
10,880	800	2375	252	.50	2700	287	.72	3015	320	.97	3335	354	1.22	3610	383	1.51
12,240	900	2560	272	.63	2885	306	.90	3180	337	1.15	3470	368	1.42	3725	395	1.71
13,600	1000	2800	297	.79	3075	326	1.08	3350	356	1.37	3610	383	1.67	3865	410	1.98
14,960	1100				3270	346	1.28	3530	375	1.62	3775	401	1.94	4015	426	2.30
16,320	1200				3460	367	1.53	3720	395	1.89	3950	419	2.25	4175	443	2.64
17,680	1300							3920	416	2.23	4130	438	2.57	4340	461	3.00
19,040	1400							4120	437	2.59	4320	459	2.98	4520	480	3.42
20,400	1500										4530	481	3.42	4710	500	3.87
21,760	1600										4750	504	3.94	4900	520	4.39
23,120	1700													5100	541	4.95
24,480	1800													5310	564	5.56
STATIC PRESSURE ➤		¾″			⅞″			1″			1 ¼″			1 ½″		
10,880	800	3890	413	1.82	4150	441	2.16	4400	467	2.52	4860	516	3.31	5280	560	4.17
12,240	900	3990	424	2.05	4220	448	2.39	4450	472	2.75	4910	521	3.56	5330	566	4.46
13,600	1000	4110	436	2.32	4330	460	2.69	4530	481	3.02	4980	529	3.83	5400	573	4.77
14,960	1100	4240	450	2.64	4450	472	3.00	4650	494	3.37	5075	539	4.16	5470	581	5.11
16,320	1200	4380	465	3.00	4580	486	3.33	4780	507	3.74	5170	549	4.57	5550	589	5.50
17,680	1300	4520	480	3.38	4720	501	3.74	4920	522	4.16	5290	561	5.02	5650	600	5.92
19,040	1400	4680	497	3.78	4880	518	4.21	5070	538	4.69	5425	575	5.54	5770	613	6.44
20,400	1500	4855	515	4.28	5050	536	4.73	5230	555	5.22	5580	592	6.12	5890	625	7.02
21,760	1600	5050	536	4.80	5230	555	5.27	5400	573	5.81	5740	609	6.75	6030	640	7.68
23,120	1700	5250	557	5.34	5410	574	5.90	5580	592	6.44	5910	627	7.43	6190	657	8.42
24,480	1800	5450	579	6.00	5600	594	6.57	5770	613	7.15	6090	646	8.20	6360	675	9.25
25,840	1900	5655	600	6.65	5810	617	7.30	5960	633	7.88	6275	665	9.00	6530	693	10.1
27,200	2000	5860	622	7.48	6040	641	8.06	6150	653	8.68	6430	682	9.87	6700	711	11.0
STATIC PRESSURE ➤		1 ¾″			2″			2 ¼″			2 ½″			3″		
13,600	1000	5790	614	5.72	6150	653	6.64	6490	689	7.70	6820	723	8.66	7470	792	11.1
14,960	1100	5850	621	5.99	6200	658	7.02	6540	694	8.15	6865	729	9.11	7480	793	11.5
16,320	1200	5920	628	6.40	6260	664	7.45	6600	701	8.58	6920	734	9.66	7520	798	12.0
17,680	1300	6005	636	6.89	6345	673	7.90	6680	707	9.00	6975	739	10.2	7570	803	12.6
19,040	1400	6110	648	7.45	6440	683	8.45	6780	719	9.50	7040	747	10.8	7630	810	13.2
20,400	1500	6230	661	8.06	6550	695	9.07	6880	730	10.2	7120	755	11.4	7700	817	13.8
21,760	1600	6360	675	8.74	6670	706	9.78	6980	741	10.9	7220	766	12.0	7780	826	14.6
23,120	1700	6500	690	9.50	6800	721	10.5	7090	752	11.7	7320	777	12.8	7870	835	15.5
24,480	1800	6650	706	10.3	6940	736	11.4	7210	765	12.6	7450	790	13.6	7980	847	16.4
25,840	1900	6800	721	11.2	7080	751	12.4	7340	779	13.5	7590	805	14.6	8100	859	17.4
27,200	2000	6960	738	12.2	7220	766	13.4	7480	793	14.6	7730	820	15.8	8220	872	18.5
29,920	2200	7300	775	14.4	7550	801	15.6	7800	828	17.0	8030	852	18.4	8480	900	21.0
32,640	2400	7650	812	16.5	7890	837	18.0	8120	861	19.4	8340	885	20.9	8760	930	23.9

All published ratings based on air at 70° F. and 29.92″ barometric pressure, and on tests in accordance with N.A.F.M. test code.

TABLE 58

No. 40 DOUBLE WIDTH DOUBLE INLET FAN — TYPE BI

$$\text{Max. HP} = 54 \left(\frac{\text{RPM}}{1000}\right)^3$$

CIRCUM. = 10.55′ **WHEEL DIA.** 40¼″ **OUTLET AREA** = 16.83 SQ. FT.

STATIC PRESSURE ➔		⅛″			¼″			⅜″			½″			⅝″		
CFM	OUTLET VEL.	Tip Speed	RPM	HP	Tip Speed	RPM	HP	Tip Speed	RPM	HP	Tip Speed	RPM	HP	Tip Speed	RPM	HP
10,098	600	1975	187	.36	2390	226	.59	2770	262	.85	3130	297	1.15	3460	328	1.52
11,781	700	2160	205	.48	2535	240	.74	2885	273	1.01	3220	305	1.32	3520	333	1.69
13,464	800	2375	225	62	2700	256	.90	3015	286	1.21	3335	316	1.52	3610	342	1.89
15,147	900	2560	243	.79	2885	273	1 12	3180	301	1.44	3470	329	1.77	3725	353	2.14
16,830	1000	2800	265	.99	3075	291	1.35	3350	317	1.71	3610	342	2.08	3865	366	2.48
18,513	1100				3270	310	1.60	3530	334	2.02	3775	358	2.42	4015	381	2.88
20,196	1200				3460	328	1.91	3720	352	2.36	3950	374	2.81	4175	396	3.30
21,879	1300							3920	371	2.79	4130	392	3.22	4340	412	3.75
23,562	1400							4120	391	3.24	4320	410	3.72	4520	428	4.27
25.245	1500										4530	429	4.26	4710	446	4.84
26,928	1600										4750	450	4.92	4900	464	5.49
28.611	1700													5100	483	6.19
30.294	1800													5310	503	6.95
STATIC PRESSURE ➔		¾″			⅞″			1″			1 ¼″			1 ½″		
13.464	800	3890	369	2.27	4150	393	2.70	4400	417	3.15	4860	460	4.14	5280	500	5.21
15,147	900	3990	378	2.56	4220	400	2.99	4450	422	3.44	4910	466	4.45	5330	505	5.58
16,830	1000	4110	390	2.90	4330	410	3.36	4530	429	3.78	4980	472	4.79	5400	512	5.96
18,513	1100	4240	402	3.30	4450	422	3.75	4650	440	4.21	5075	481	5.20	5470	518	6.39
20,196	1200	4380	415	3.75	4580	434	4.16	4780	453	4.67	5170	490	5.71	5550	526	6.88
21,879	1300	4520	428	4.22	4720	447	4.67	4920	467	5.20	5290	501	6.28	5650	535	7.40
23,562	1400	4680	443	4.72	4880	462	5.26	5070	480	5.86	5425	514	6.92	5770	547	8.05
25.245	1500	4855	460	5.35	5050	478	5.91	5230	496	6.53	5580	529	7.65	5890	558	8.78
26,928	1600	5050	479	6.00	5230	496	6.59	5400	512	7.26	5740	544	8.44	6030	571	9.60
28.611	1700	5250	498	6.68	5410	513	7.39	5580	529	8.05	5910	560	9.30	6190	587	10.5
30,294	1800	5450	517	7 50	5600	530	8.21	5770	547	8.94	6090	577	10.2	6360	603	11.5
31,977	1900	5655	536	8.31	5810	551	9.12	5960	565	9.87	6275	594	11.2	6530	619	12.6
33,660	2000	5860	555	9.35	6040	573	10.1	6150	583	10.8	6430	610	12.3	6700	635	13.7
STATIC PRESSURE ➔		1 ¾″			2″			2 ¼″			2 ½″			3″		
16,830	1000	5790	549	7.15	6150	583	8.30	6490	615	9.63	6820	646	10.8	7470	708	13.8
18,513	1100	5850	554	7.49	6200	588	8.79	6540	620	10.2	6865	650	11.4	7480	709	14.4
20,196	1200	5920	561	8.00	6260	593	9.31	6600	625	10.7	6920	656	12.1	7520	712	15.0
21,879	1300	6005	569	8.61	6345	602	9.88	6680	633	11.3	6975	661	12.7	7570	717	15.7
23,562	1400	6110	579	9.31	6440	610	10.6	6780	642	12.0	7040	667	13.5	7630	723	16.5
25,245	1500	6230	591	10.1	6550	621	11.3	6880	652	12.7	7120	675	14.2	7700	730	17.3
26,928	1600	6360	603	10.9	6670	632	12.2	6980	662	13.6	7220	684	15.0	7780	737	18.2
28,611	1700	6500	616	11.9	6800	644	13.1	7090	672	14.6	7320	694	16.0	7870	745	19.4
30,294	1800	6650	630	12.9	6940	658	14.3	7210	683	15.7	7450	706	17.0	7980	756	20.5
31,977	1900	6800	644	14.0	7080	671	15.5	7340	696	16.9	7590	719	18.2	8100	768	21.7
33,660	2000	6960	660	15.3	7220	684	16.8	7480	709	18.2	7730	733	19.7	8220	779	23.2
37,026	2200	7300	692	18.0	7550	715	19.5	7800	739	21.2	8030	761	23.0	8480	803	26.2
40,392	2400	7650	725	20.6	7890	747	22.5	8120	770	24.3	8340	790	26.1	8760	830	29.8

TABLE 59

No. 44 DOUBLE WIDTH DOUBLE INLET FAN — TYPE BI

$$\text{Max. HP} = 89 \left(\frac{\text{RPM}}{1000}\right)^3$$

CIRCUM. = 11.65′ **WHEEL DIA.** 44½″ **OUTLET AREA** = 20.54 SQ. FT.

STATIC PRESSURE ➔		⅛″			¼″			⅜″			½″			⅝″		
CFM	OUTLET VEL.	Tip Speed	RPM	HP	Tip Speed	RPM	HP	Tip Speed	RPM	HP	Tip Speed	RPM	HP	Tip Speed	RPM	HP
12.324	600	1975	170	.44	2390	205	.72	2770	238	1.04	3130	268	1.41	3460	297	1.87
14.378	700	2160	185	.58	2535	217	.90	2885	248	1.24	3220	276	1.62	3520	302	2.06
16.432	800	2375	203	.77	2700	232	1.10	3015	259	1.48	3335	286	1.87	3610	310	2.31
18.486	900	2560	220	.96	2885	247	1.38	3180	273	1.76	3470	298	2.17	3725	320	2.62
20.540	1000	2800	240	1.21	3075	264	1.65	3350	287	2.10	3610	310	2.55	3865	331	3.03
22.594	1100				3270	281	1.96	3530	303	2.48	3775	324	2.97	4015	344	3.52
24.648	1200				3460	297	2.34	3720	319	2.89	3950	339	3.44	4175	358	4.04
26.702	1300							3920	336	3.42	4130	355	3.93	4340	373	4.59
28.756	1400							4120	354	3.96	4320	371	4.56	4520	388	5.23
30.810	1500										4530	388	5.22	4710	403	5.91
32.864	1600										4750	408	6.02	4900	420	6.71
34.918	1700													5100	437	7.58
36.972	1800													5310	455	8.51
STATIC PRESSURE ➔		¾″			⅞″			1″			1 ¼″			1 ½″		
16.432	800	3890	334	2.79	4150	356	3.30	4400	377	3.86	4860	417	5.07	5280	453	6.39
18.486	900	3990	342	3.14	4220	362	3.66	4450	382	4.21	4910	421	5.45	5330	457	6.83
20.540	1000	4110	353	3.55	4330	372	4.12	4530	389	4.62	4980	427	5.86	5400	463	7.30
22.594	1100	4240	364	4.04	4450	382	4.59	4650	399	5.16	5075	435	6.37	5470	470	7.82
24.648	1200	4380	376	4.59	4580	393	5.10	4780	410	5.72	5170	443	7.00	5550	476	8.42
26.702	1300	4520	388	5.17	4720	404	5.72	4920	422	6.37	5290	454	7.70	5650	485	9.07
28.756	1400	4680	402	5.79	4880	419	6.45	5070	435	7.19	5425	465	8.49	5770	495	9.85
30.810	1500	4855	417	6.55	5050	433	7.25	5230	448	8.00	5580	479	9.36	5890	505	10.8
32.864	1600	5050	433	7.35	5230	448	8.06	5400	463	8.90	5740	492	10.3	6030	517	11.8
34.918	1700	5250	450	8.18	5410	464	9.02	5580	479	9.85	5910	507	11.4	6190	530	12.9
36.972	1800	5450	468	9.19	5600	480	10.2	5770	495	10.9	6090	522	12.6	6360	545	14.2
39.026	1900	5655	485	10.2	5810	498	11.2	5960	502	12.0	6275	538	13.8	6530	560	15.4
41.080	2000	5860	503	11.5	6040	518	12.3	6150	527	13.3	6430	552	15.1	6700	575	16.8
STATIC PRESSURE ➔		1 ¾″			2″			2 ¼″			2 ½″			3″		
20.540	1000	5790	497	8.76	6150	527	10.2	6490	557	11.8	6820	585	13.2	7470	640	17.0
22.594	1100	5850	502	9.20	6200	532	10.7	6540	561	12.4	6865	589	13.9	7480	641	17.6
24.648	1200	5920	508	9.80	6260	537	11.4	6600	566	13.1	6920	593	14.7	7520	645	18.4
26.702	1300	6005	515	10.2	6345	544	12.1	6680	573	13.8	6975	599	15.6	7570	650	19.3
28.756	1400	6110	524	11.4	6440	553	12.9	6780	581	14.5	7040	604	16.5	7630	655	20.4
30.810	1500	6230	534	12.3	6550	562	13.9	6880	590	15.6	7120	611	17.4	7700	660	21.1
32.864	1600	6360	545	13.4	6670	572	15.0	6980	599	16.7	7220	620	18.4	7780	667	22.4
34.918	1700	6500	558	14.5	6800	583	16.2	7090	608	17.9	7320	628	19.6	7870	675	23.7
36.972	1800	6650	570	15.8	6940	595	17.5	7210	619	19.3	7450	639	20.9	7980	684	25.1
39.026	1900	6800	583	17.2	7080	607	19.0	7340	630	20.8	7590	652	22.4	8100	695	26.6
41.080	2000	6960	597	18.7	7220	620	20.5	7480	641	22.4	7730	663	24.2	8220	706	28.3
45.188	2200	7300	626	22.1	7550	648	23.9	7800	669	26.0	8030	688	28.2	8480	727	32.1
49.296	2400	7650	657	25.3	7890	677	27.6	8120	697	29.7	8340	715	32.0	8760	752	36.5

All published ratings based on air at 70° F. and 29.92″ barometric pressure, and on tests in accordance with N.A.F.M. test code.

BI – DWDI

BI – DWDI

TABLE 60

No. 49 DOUBLE WIDTH DOUBLE INLET FAN — TYPE BI

$$\text{Max. HP} = 145\left(\frac{\text{RPM}}{1000}\right)^3$$

CIRCUM. = 12.83 WHEEL DIA. 49" OUTLET AREA = 25.0 SQ. FT.

STATIC PRESSURE →		1/8"			1/4"			3/8"			1/2"			5/8"		
CFM	OUTLET VEL.	Tip Speed	RPM	HP	Tip Speed	RPM	HP	Tip Speed	RPM	HP	Tip Speed	RPM	HP	Tip Speed	RPM	HP
15,000	600	1975	154	.54	2390	186	.87	2770	216	1.26	3130	244	1.70	3460	270	2.26
17,500	700	2160	168	.70	2535	197	1.09	2885	225	1.50	3220	251	1.96	3520	274	2.50
20,000	800	2375	185	.92	2700	210	1.33	3015	235	1.80	3335	260	2.26	3610	282	2.80
22,500	900	2560	200	1.17	2885	225	1.66	3180	248	2.12	3470	271	2.63	3725	290	3.16
25,000	1000	2800	218	1.46	3075	240	2.00	3350	261	2.53	3610	282	3.09	3865	301	3.66
27,500	1100				3270	255	2.36	3530	275	3.00	3775	294	3.59	4015	313	4.25
30,000	1200				3460	270	2.83	3720	290	3.50	3950	308	4.16	4175	326	4.89
32,500	1300							3920	306	4.12	4130	322	4.75	4340	339	5.50
35,000	1400							4120	322	4.79	4320	337	5.51	4520	352	6.32
37,500	1500										4530	353	6.32	4710	367	7.16
40,000	1600										4750	370	7.30	4900	382	8.12
42,500	1700													5100	398	9.16
45,000	1800													5310	414	10.3
STATIC PRESSURE →		3/4"			7/8"			1"			1 1/4"			1 1/2"		
20,000	800	3890	303	3.36	4150	324	4.00	4400	343	4.66	4860	379	6.13	5280	412	7.72
22,500	900	3990	311	3.80	4220	330	4.42	4450	347	5.09	4910	383	6.60	5330	416	8.25
25,000	1000	4110	321	4.30	4330	338	4.99	4530	353	5.59	4980	388	7.10	5400	421	8.84
27,500	1100	4240	331	4.89	4450	347	5.55	4650	363	6.24	5075	396	7.70	5470	426	9.45
30,000	1200	4380	341	5.55	4580	357	6.17	4780	373	6.92	5170	403	8.46	5550	430	10.2
32,500	1300	4520	352	6.25	4720	368	6.92	4920	384	7.70	5290	412	9.30	5650	440	11.0
35,000	1400	4680	365	7.00	4880	380	7.80	5070	395	8.69	5425	423	10.3	5770	450	11.9
37,500	1500	4855	378	7.91	5050	394	8.76	5230	408	9.66	5580	435	11.3	5890	459	13.0
40,000	1600	5050	394	8.89	5230	408	9.75	5400	421	10.7	5740	447	12.5	6030	470	14.2
42,500	1700	5250	409	9.90	5410	422	10.9	5580	435	11.9	5910	461	13.8	6190	483	15.6
45,000	1800	5450	425	11.1	5600	436	12.2	5770	450	13.2	6090	475	15.2	6360	496	17.1
47,500	1900	5655	441	12.3	5810	453	13.5	5960	465	14.6	6275	489	16.7	6530	509	18.7
50,000	2000	5860	457	13.8	6040	471	14.9	6150	479	16.0	6430	501	18.2	6700	522	20.4
STATIC PRESSURE →		1 3/4"			2"			2 1/4"			2 1/2"			3"		
25,000	1000	5790	452	10.6	6150	479	12.3	6490	506	14.3	6820	532	16.0	7470	582	20.6
27,500	1100	5850	456	11.1	6200	483	13.0	6540	510	15.1	6865	535	16.9	7480	583	21.3
30,000	1200	5920	462	11.8	6260	488	13.8	6600	515	15.9	6920	539	17.9	7520	586	22.2
32,500	1300	6005	468	12.7	6345	494	14.6	6680	521	16.7	6975	544	18.9	7570	590	23.3
35,000	1400	6110	476	13.8	6440	502	15.6	6780	528	17.6	7040	549	20.0	7630	594	24.4
37,500	1500	6230	486	14.9	6550	511	16.8	6880	536	18.9	7120	555	21.1	7700	600	25.6
40,000	1600	6360	495	16.2	6670	520	18.1	6980	544	20.2	7220	563	22.2	7780	607	27.0
42,500	1700	6500	507	17.6	6800	530	19.5	7090	553	21.6	7320	571	23.7	7870	613	28.7
45,000	1800	6650	518	19.1	6940	541	21.1	7210	562	23.3	7450	580	25.2	7980	622	30.4
47,500	1900	6800	530	20.7	7080	552	23.0	7340	572	25.0	7590	591	27.0	8100	632	32.2
50,000	2000	6960	543	22.4	7220	563	24.8	7480	583	27.0	7730	603	29.3	8220	641	34.2
55,000	2200	7300	569	26.7	7550	588	28.9	7800	608	31.5	8030	626	34.0	8480	661	38.9
60,000	2400	7650	596	30.6	7890	615	33.3	8120	633	35.9	8340	650	38.7	8760	682	44.2

TABLE 61

No. 54 DOUBLE WIDTH DOUBLE INLET FAN — TYPE BI

$$\text{Max. HP} = 236\left(\frac{\text{RPM}}{1000}\right)^3$$

CIRCUM = 14.14' WHEEL DIA 54" OUTLET AREA = 30.6 SQ. FT.

STATIC PRESSURE →		1/8"			1/4"			3/8"			1/2"			5/8"		
CFM	OUTLET VEL.	Tip Speed	RPM	HP	Tip Speed	RPM	HP	Tip Speed	RPM	HP	Tip Speed	RPM	HP	Tip Speed	RPM	HP
18,360	600	1975	140	68	2390	169	1.08	2770	196	1 52	3130	221	2 08	3460	244	2 72
21,420	700	2160	153	88	2535	179	1 32	2885	204	1 84	3220	228	2 40	3520	249	3 04
24,480	800	2375	168	1 12	2700	191	1 64	3015	214	2 16	3335	236	2 76	3610	256	3 40
27,540	900	2560	181	1 40	2885	203	2 04	3180	225	2 56	3470	245	3 20	3725	264	3 84
30,600	1000	2800	198	1 76	3075	217	2 44	3350	237	3.08	3610	255	3 76	3865	273	4 48
33,660	1100				3270	231	2 88	3530	250	3 64	3775	267	4 40	4015	284	5 16
36,720	1200				3460	244	3 44	3720	263	4 28	3950	279	5 04	4175	295	5.88
39,780	1300							3920	277	5 00	4130	292	5 76	4340	307	6 76
42,840	1400							4120	291	5 80	4320	306	6 60	4520	320	7 68
45,900	1500										4530	320	7 68	4710	333	8 72
48,960	1600										4750	336	8 88	4900	347	9 84
52,020	1700													5100	361	11 1
55,080	1800													5310	376	12 5
STATIC PRESSURE →		3/4"			7/8"			1"			1 1/4"			1 1/2"		
24,480	800	3890	275	4.08	4150	293	4 92	4400	311	5 72	4860	343	7 44	5280	373	9.32
27,540	900	3990	282	4 60	4220	298	5 36	4450	315	6 16	4910	347	8 04	5330	377	10 0
30,600	1000	4110	290	5 20	4330	306	6 04	4530	321	6 80	4980	352	8 60	5400	382	10 6
33,660	1100	4240	300	5 92	4450	315	6 72	4650	329	7 56	5075	359	9 32	5470	387	11 4
36,720	1200	4380	310	6 72	4580	324	7 48	4780	338	8 36	5170	366	10 3	5550	393	12 2
39,780	1300	4520	320	7 56	4720	334	8 40	4920	348	9 36	5290	374	11 4	5650	400	13 3
42,840	1400	4680	331	8 56	4880	345	9 48	5070	359	10 5	5425	383	12 4	5770	408	14 5
45,900	1500	4855	344	9 60	5050	357	10 6	5230	370	11 7	5580	394	13 7	5890	417	15 8
48,960	1600	5050	357	10 7	5230	370	11 8	5400	382	13 0	5740	406	15 2	6030	427	17 2
52,020	1700	5250	371	12 0	5410	383	13 3	5580	395	14 5	5910	418	16 7	6190	438	18 9
55,080	1800	5450	385	13 4	5600	396	14 8	5770	408	16 0	6090	431	18 4	6360	450	20 8
59,140	1900	5655	400	15 0	5810	411	16 4	5960	421	17 7	6275	444	20 1	6530	462	22 8
61,200	2000	5860	415	16 8	6040	427	18 1	6150	435	19 5	6430	455	22 0	6700	474	24 8
STATIC PRESSURE →		1 3/4"			2"			2 1/4"			2 1/2"			3"		
30,600	1000	5790	409	12 8	6150	435	14 9	6490	459	17 3	6820	482	19 4	7470	528	24 9
33,660	1100	5850	414	13 5	6200	439	15 8	6540	463	18 3	6865	486	20 4	7480	529	25 6
36,720	1200	5920	419	14 4	6260	443	16 8	6600	467	19 3	6920	490	21.8	7520	532	26 8
39,780	1300	6005	425	15.5	6345	448	17.8	6680	472	20 3	6975	494	23 0	7570	536	28 2
42,840	1400	6110	432	16.8	6440	455	19.0	6780	479	21 3	7040	498	24 3	7630	540	29 7
45 900	1500	6230	440	18.1	6550	463	20 4	6880	487	22 9	7120	503	25.6	7700	545	31.2
48 960	1600	6360	450	19 6	6670	472	22.0	6980	494	24.6	7220	510	27.1	7780	550	32 8
52,020	1700	6500	460	21.8	6800	481	23 7	7090	502	26.4	7320	518	28.8	7870	556	34 8
55,080	1800	6650	470	23.3	6940	491	25 6	7210	510	28.2	7450	527	30.6	7980	564	37 0
59,140	1900	6800	481	25.4	7080	501	27 7	7340	519	30.3	7590	537	32.8	8100	573	39 2
61,200	2000	6960	492	27.6	7220	511	29.1	7480	529	32.9	7730	547	35.7	8220	582	41 6
67,320	2200	7300	516	32.2	7550	534	35.2	7800	552	38.2	8030	568	40.1	8480	600	47 2
73,440	2400	7650	541	37 6	7890	558	40.4	8120	575	43.6	8340	590	46 8	8760	620	53 6

All published ratings based on air at 70° F. and 29.92" barometric pressure, and on tests in accordance with N.A.F.M. test code.

All published ratings based on air at 70° F. and 29.92" barometric pressure, and on tests in accordance with N.A.F.M. test code.

TABLE 62

No. 60 DOUBLE WIDTH DOUBLE INLET FAN — TYPE BI

$$\text{Max. HP} = 400 \left(\frac{\text{RPM}}{1000}\right)^3$$

CIRCUM. = 15.71' WHEEL DIA. 60" OUTLET AREA = 36.95 SQ. FT.

STATIC PRESSURE ➤		1/8"			1/4"			3/8"			1/2"			5/8"		
CFM	OUTLET VEL.	Tip Speed	RPM	HP	Tip Speed	RPM	HP	Tip Speed	RPM	HP	Tip Speed	RPM	HP	Tip Speed	RPM	HP
22,170	600	1975	126	.80	2390	152	1.32	2770	176	1.88	3130	199	2.44	3460	220	3.26
25,865	700	2160	138	1.08	2535	161	1.64	2885	184	2.24	3220	205	2.92	3520	224	3.76
29,560	800	2375	151	1.40	2700	172	2.00	3015	192	2.68	3335	212	3.36	3610	230	4.20
33,255	900	2560	163	1.76	2885	184	2.48	3180	203	3.20	3470	221	3.92	3725	238	4.72
36,950	1000	2800	178	2.60	3075	196	3.00	3350	214	3.80	3610	230	4.60	3865	246	5.48
40,645	1100				3270	208	3.56	3530	225	4.48	3775	240	5.36	4015	256	6.36
44,340	1200				3460	220	4.24	3720	237	5.24	3950	251	6.24	4175	266	7.28
48,035	1300							3920	250	6.16	4130	263	7.12	4340	276	8.32
51,730	1400							4120	263	7.20	4320	275	8.20	4520	288	9.48
55,425	1500										4530	288	9.48	4710	300	10.8
59,120	1600										4750	302	10.9	4900	312	12.2
62,815	1700													5100	325	13.7
66,512	1800													5310	338	15.4
STATIC PRESSURE ➤		3/4"			7/8"			1"			1 1/4"			1 1/2"		
29,560	800	3890	248	5.04	4150	264	5.96	4400	280	7.00	4860	309	9.20	5280	336	11.5
33,255	900	3990	254	5.68	4220	269	6.60	4450	284	7.64	4910	313	9.84	5330	340	12.4
36,950	1000	4110	262	6.44	4330	276	7.44	4530	288	8.36	4980	317	10.6	5400	344	13.2
40,645	1100	4240	270	7.32	4450	284	8.32	4650	296	9.28	5075	323	11.6	5470	349	14.2
44,430	1200	4380	278	8.28	4580	292	9.28	4780	304	10.4	5170	330	12.7	5550	354	15.2
48,035	1300	4520	288	9.36	4720	301	10.4	4920	313	11.6	5290	337	13.9	5650	360	16.4
51,730	1400	4680	298	10.5	4880	311	11.7	5070	323	13.0	5425	345	15.4	5770	367	17.9
55,425	1500	4855	309	11.9	5050	322	13.1	5230	333	14.5	5580	355	17.0	5890	375	19.5
59,120	1600	5050	321	13.3	5230	333	14.6	5400	344	16.1	5740	366	18.7	6030	384	21.3
62,815	1700	5250	334	14.8	5410	345	16.4	5580	355	17.8	5910	377	20.6	6190	394	23.4
66,510	1800	5450	347	16.6	5600	357	18.2	5770	367	19.8	6090	388	22.7	6360	405	25.7
70,205	1900	5655	360	18.5	5810	370	20.2	5960	379	21.9	6275	399	25.0	6530	416	28.1
73,900	2000	5860	373	20.8	6040	384	22.4	6150	391	24.0	6430	410	27.4	6700	427	30.6
STATIC PRESSURE ➤		1 3/4"			2"			2 1/4"			2 1/2"			3"		
36,950	1000	5790	369	15.8	6150	391	18.5	6490	413	21.4	6820	434	24.0	7470	476	30.8
43,645	1100	5850	373	16.6	6200	395	19.5	6540	417	22.6	6865	437	25.3	7480	477	32.0
44,430	1200	5920	377	17.7	6260	399	20.7	6600	421	23.8	6920	441	26.8	7520	479	33.4
48,035	1300	6005	383	19.1	6345	404	22.0	6680	426	25.0	6975	445	28.4	7570	482	35.0
51,730	1400	6110	389	20.6	6440	410	23.4	6780	432	26.4	7040	449	30.0	7630	486	36.6
55,425	1500	6230	397	22.4	6550	417	25.2	6880	438	28.3	7120	454	31.7	7700	491	38.4
59,120	1600	6360	405	24.2	6670	425	27.2	6980	444	30.4	7220	460	33.5	7780	496	40.4
62,815	1700	6500	414	26.4	6800	433	29.2	7090	451	32.6	7320	466	35.5	7870	502	42.8
66,510	1800	6650	423	28.7	6940	442	31.6	7210	459	34.9	7450	474	37.9	7980	509	45.6
70,205	1900	6800	433	31.2	7080	451	34.3	7340	468	37.5	7590	483	40.8	8100	516	48.4
73,900	2000	6960	444	34.0	7220	460	37.2	7480	477	40.8	7730	492	44.0	8220	523	51.6
81,290	2200	7300	465	39.8	7550	481	43.6	7800	497	47.2	8030	512	50.8	8480	540	58.4
88,680	2400	7650	487	46.0	7890	502	50.0	8120	517	54.0	8340	531	58.0	8760	558	66.0

TABLE 63

No. 66 DOUBLE WIDTH DOUBLE INLET FAN — TYPE BI

$$\text{*Max. HP} = 644 \left(\frac{\text{RPM}}{1000}\right)^3$$

CIRCUM. = 17.28' WHEEL DIA. 66" OUTLET AREA = 43.90 SQ. FT.

STATIC PRESSURE ➤		1/8"			1/4"			3/8"			1/2"			5/8"		
CFM	OUTLET VEL.	Tip Speed	RPM	HP	Tip Speed	RPM	HP	Tip Speed	RPM	HP	Tip Speed	RPM	HP	Tip Speed	RPM	HP
26,340	600	1975	114	1.00	2390	138	1.60	2770	160	2.28	3130	181	3.08	3460	200	4.08
30,730	700	2160	125	1.28	2535	147	1.96	2885	167	2.72	3220	186	3.56	3520	204	4.52
35,120	800	2375	137	1.68	2700	156	2.64	3015	175	3.24	3335	193	4.08	3610	209	5.08
39,510	900	2560	148	2.12	2885	167	3.04	3180	184	3.88	3470	201	4.76	3725	215	5.76
43,900	1000	2800	162	2.84	3075	178	3.64	3350	194	4.60	3610	209	5.60	3865	223	6.64
48,290	1100				3270	189	4.32	3530	204	5.44	3775	218	6.48	4015	232	7.72
52,680	1200				3460	200	5.12	3720	215	6.36	3950	228	7.56	4175	241	8.84
57,070	1300							3920	227	7.48	4130	238	8.64	4340	251	10.1
61,460	1400							4120	239	8.72	4320	250	10.0	4520	261	11.5
65,850	1500										4530	262	11.5	4710	272	13.0
70,240	1600										4750	275	13.2	4900	283	14.8
74,630	1700													5100	290	16.6
79,020	1800													5310	307	18.7
STATIC PRESSURE ➤		3/4"			7/8"			1"			1 1/4"			1 1/2"		
35,120	800	3890	225	6.12	4150	240	7.24	4400	255	8.48	4860	282	11.1	5280	306	14.0
39,510	900	3990	231	6.88	4220	245	8.00	4450	258	9.24	4910	285	12.0	5330	309	14.9
43,900	1000	4110	238	7.80	4330	251	9.00	4530	263	10.1	4980	288	12.8	5400	313	16.0
48,290	1100	4240	246	8.84	4450	258	10.1	4650	269	11.3	5075	294	14.0	5470	317	17.2
52,680	1200	4380	254	10.1	4580	266	11.2	4780	277	12.6	5170	300	15.4	5550	322	18.5
57,070	1300	4520	262	11.3	4720	274	12.6	4920	285	14.0	5290	306	16.9	5650	327	19.9
61,460	1400	4680	271	13.7	4880	283	14.2	5070	294	15.8	5425	314	18.6	5770	334	21.6
65,850	1500	4855	282	14.4	5050	293	15.9	5230	303	17.5	5580	323	20.6	5890	342	23.6
70,240	1600	5050	293	16.1	5230	303	17.7	5400	313	19.5	5740	332	22.7	6030	350	25.8
74,630	1700	5250	304	18.0	5410	314	19.8	5580	323	21.6	5910	342	25.0	6190	359	28.3
79,020	1800	5450	316	20.1	5600	325	22.1	5770	334	24.0	6090	353	27.5	6360	368	31.1
83,410	1900	5655	328	22.3	5810	336	24.5	5960	347	26.5	6275	364	30.3	6530	378	34.1
87,800	2000	5860	340	25.2	6040	350	27.1	6150	356	29.2	6430	373	33.2	6700	388	37.1
STATIC PRESSURE ➤		1 3/4"			2"			2 1/4"			2 1/2"			3"		
43,900	1000	5790	335	19.2	6150	356	22.3	6490	376	25.9	6820	395	29.2	7470	432	37.2
48,290	1100	5850	339	20.1	6200	359	23.6	6540	379	27.4	6865	397	30.6	7480	433	38.8
52,680	1200	5920	343	21.5	6260	362	25.0	6600	382	28.8	6920	401	32.5	7520	435	40.4
57,070	1300	6005	348	23.2	6345	367	26.6	6680	387	30.3	6975	404	34.4	7570	438	42.4
61,460	1400	6110	354	25.0	6440	373	28.4	6780	392	32.0	7040	407	36.4	7630	442	44.4
65,850	1500	6230	361	27.1	6550	380	30.5	6880	398	34.3	7120	412	38.4	7700	446	46.4
70,240	1600	6360	368	29.4	6670	386	33.6	6980	404	36.8	7220	418	40.4	7780	450	48.8
74,630	1700	6500	376	32.0	6800	394	35.4	7090	410	39.4	7320	424	42.8	7870	455	52.0
79,020	1800	6650	385	34.8	6940	402	38.3	7210	418	42.0	7450	432	46.0	7980	462	55.6
83,410	1900	6800	394	37.9	7080	410	41.6	7340	425	45.2	7590	439	49.2	8100	469	58.4
87,800	2000	6960	403	41.2	7220	418	44.8	7480	433	49.2	7730	447	53.2	8220	476	62.4
96,580	2200	7300	422	48.4	7550	437	52.4	7800	451	57.2	8030	465	61.6	8480	481	70.8
105,360	2400	7650	443	55.6	7890	456	60.4	8120	470	65.2	8340	483	70.4	8760	508	80.0

All published ratings based on air at 70° F. and 29.92" barometric pressure, and on tests in accordance with N.A.F.M. test code.

BI – DWDI

STANDARD MOTOR POSITIONS

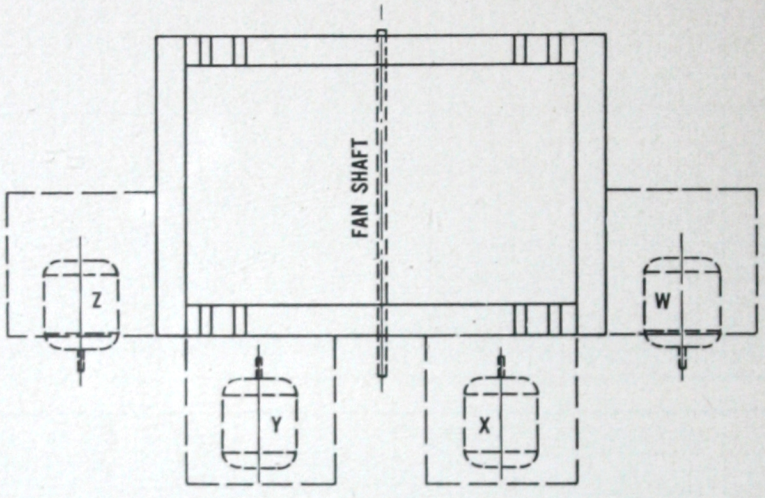

FIGURE 34

The location of motor is determined by facing the drive side of fan and designating the motor position by letters W, X, Y or Z as the case may be.

STANDARD DRIVE ARRANGEMENTS

The designations of drive arrangements shown here are recognized as standard by the NAFM.

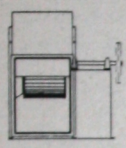

Arrangement 1

For belt drive. Wheel overhung. Two bearings on pedestal. Single inlet only. Sizes 18 thru 66

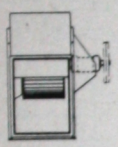

Arrangement 2

For belt drive. Pulley and wheel overhung. Two bearings in single pillow block mounted on bracket Sizes 10 thru 30

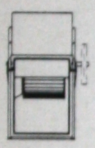

Arrangement 3

For belt drive. Pulley overhung. One bearing on each side of fan housing.

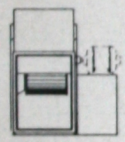

Arrangement 4

For direct drive. Wheel overhung. No bearings on fan. Wheel mounted on motor shaft. Pedestal for motor. Single inlet only.

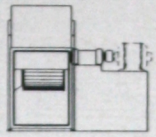

Arrangement 5

For direct drive. Wheel overhung. One bearing on pedestal. Flanged coupling and pedestal for motor. Single inlet only.

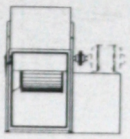

Arrangement 6

For direct drive. Three-bearing arrangement with fan bearing at inlet side. One bearing (in fan inlet), rigid coupling, and pedestal for motor.

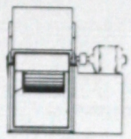

Arrangement 7

For direct drive. Similar to Arrangement 6, but with two bearings on fan, and flexible instead of rigid coupling.

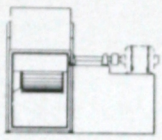

Arrangement 8

For direct drive. Similar to Arrangement 5, but with two bearings on pedestal with motor, and flexible instead of rigid coupling. Single inlet only.

FIGURE 35

DIRECTION OF ROTATION AND DISCHARGE

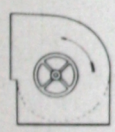

Counter-Clockwise Top Horizontal

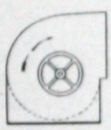

Clockwise Top Horizontal

Direction of rotation is determined from the drive side On single inlet fans, drive side is considered as opposite inlet, regardless of actual drive location

Clockwise Bottom Horizontal

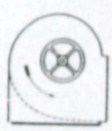

Counter-Clockwise Bottom Horizontal

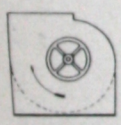

Clockwise Up-Blast

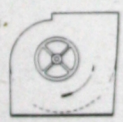

Counter-Clockwise Up-Blast

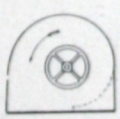

Counter-Clockwise Down-Blast

Clockwise Down-Blast

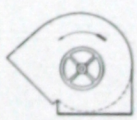

Counter-Clockwise Top Angular Down

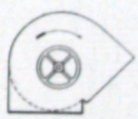

Clockwise Top Angular Down

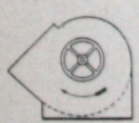

Clockwise Bottom Angular Up

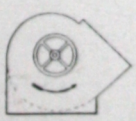

Counter-Clockwise Bottom Angular Up

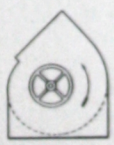

Counter-Clockwise Top Angular Up

Clockwise Top Angular Up

Clockwise Bottom Angular Down

Counter-Clockwise Bottom Angular Down

FIGURE 36

NOTE: Dimension diagrams on Pages 48 to 61 cover the four most commonly used discharges -- namely, top horizontal, bottom horizontal, up-blast and down-blast. Drawings for other standard discharge and rotations indicated above will be furnished on request.

ROUGHING-IN DIMENSIONS — ARRANGEMENT 1 — SIZES 18-30

TOP HORIZONTAL DISCHARGE

FIGURE RI-1

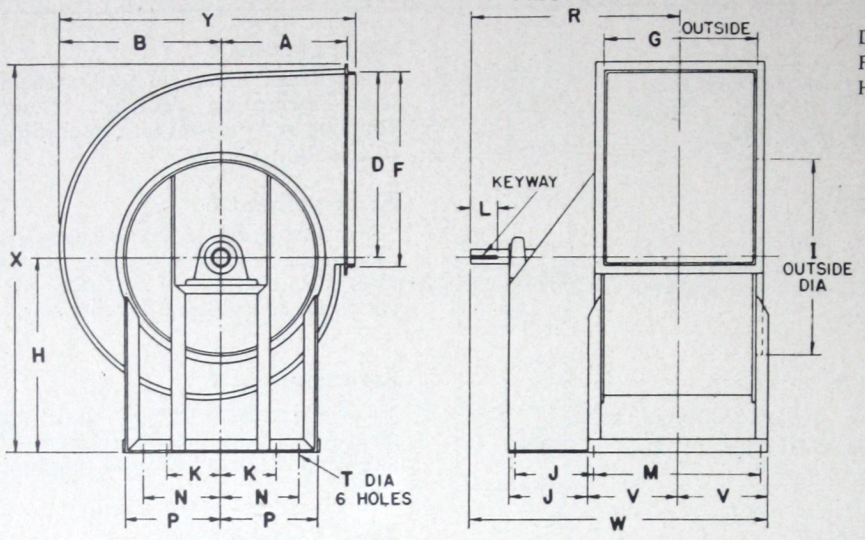

Drawings for Clockwise Rotation. For Counter Clockwise Reverse Horizontal Dimensions.

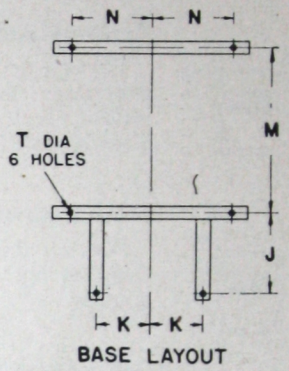

BASE LAYOUT

TABLE RI-1

FAN TYPE	FAN SIZE	WHEEL DIAM.	SHAFT DIAM.	KEY WAY	A	B	D	F	G	H	I	K	L	M	N	P	T	V	X	Y	BALL BEARING J	BALL BEARING R	BALL BEARING W	OIL RING SLEEVE BEARING J	OIL RING SLEEVE BEARING R	OIL RING SLEEVE BEARING W
FC & BI	18	18	1 1/16	3/8 X 3/16	12 7/8	15 13/16	17 13/16	18 7/8	14 5/8	19	19	6 3/8	2 1/2	16 7/16	7 1/2	9 1/4	1/16	8 7/8	37 11/16	29 9/16	9 1/2	21 3/8	30 1/4	12 1/2	26	34 7/8
FC & BI	21	21	1 1/16	3/8 X 3/16	14 7/8	18 9/16	20 7/8	21 7/8	17	22	22	6 3/8	2 1/2	18 9/16	8 7/8	10 7/8	1/16	10	43 3/4	34 1/16	11	24 1/8	34 1/8	12 1/2	27 1/4	37 1/4
FC & BI	24	24	1 1/16	3/8 X 3/16	16 3/8	20 13/16	23 5/8	24 7/8	19 3/8	26	25	7 3/8	3 1/2	21 1/16	10 1/2	12 1/2	1/16	11 3/4	50 3/4	38 1/16	12 1/2	29 1/4	40	13 1/2	31 1/4	43
FC & BI	27	27	1 3/16	3/8 X 3/16	18 3/8	23 1/2	26 13/16	27 7/8	21 13/16	29	28	7 3/8	3 1/2	23 7/16	11 1/2	14	1/16	12 13/16	56 13/16	43	14 1/2	31 7/8	44 1/2	14 1/2	33 7/16	46 1/2
FC & BI	30	30	1 3/16	1/2 X 1/4	20 3/4	26	29 13/16	30 7/8	24 1/4	32	31	8 3/8	4	26 7/16	12 1/2	15 1/2	1/16	14 1/8	62 13/16	47 7/8	16 1/2	35 3/4	49 7/8	16 1/2	37 3/4	51 7/8

UP-BLAST DISCHARGE

FIGURE RI-2

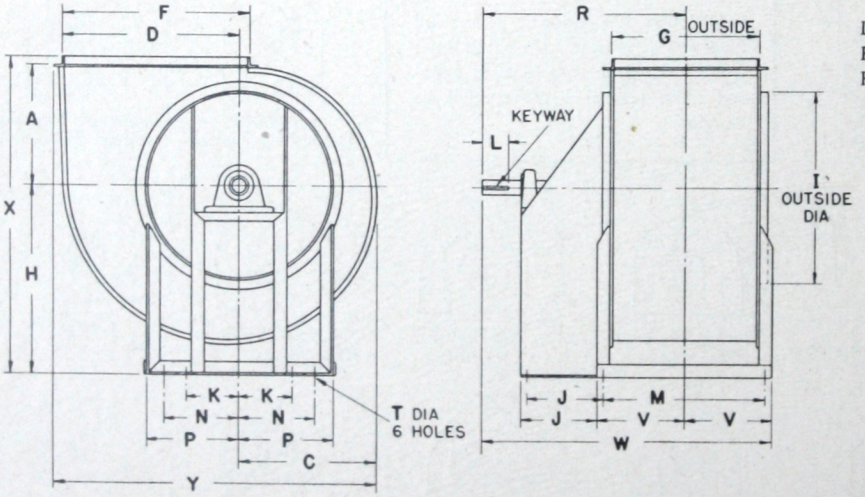

Drawings for Clockwise Rotation. For Counter Clockwise Reverse Horizontal Dimensions.

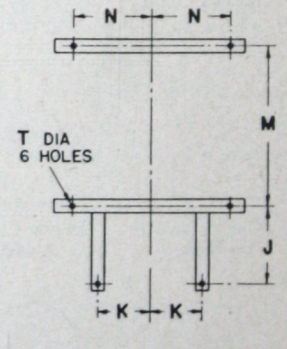

BASE LAYOUT

TABLE RI-2

FAN TYPE	FAN SIZE	WHEEL DIAM.	SHAFT DIAM.	KEY WAY	A	C	D	F	G	H	I	K	L	M	N	P	T	V	X	Y	BALL BEARING J	BALL BEARING R	BALL BEARING W	OIL RING SLEEVE BEARING J	OIL RING SLEEVE BEARING R	OIL RING SLEEVE BEARING W
FC & BI	18	18	1 1/16	3/8 X 3/16	12 7/8	13 7/8	17 1/2	18 7/8	14 5/8	19	19	6 3/8	2 1/2	16 7/16	7 1/2	9 1/4	1/16	8 7/8	32 3/4	32 1/16	9 1/2	21 3/8	30 1/4	12 1/2	26	34 7/8
FC & BI	21	21	1 1/16	3/8 X 3/16	14 7/8	16 1/8	20 7/8	21 7/8	17	22	22	6 7/8	2 1/2	18 9/16	8 7/8	10 7/8	1/16	10	37 3/4	37 7/8	11	24 1/8	34 1/8	12 1/2	27 1/4	37 1/4
FC & BI	24	24	1 1/16	3/8 X 3/16	16 3/8	18 3/8	23 5/8	24 7/8	19 3/8	26	25	7 3/8	3 1/2	21 1/16	10 1/2	12 1/2	1/16	11 3/4	43 1/2	43 1/8	12 1/2	28 1/4	40	13 1/2	31 1/4	43
FC & BI	27	27	1 3/16	3/8 X 3/16	18 3/8	20 1/16	26 13/16	27 7/8	21 13/16	29	28	7 3/8	3 1/2	23 7/16	11 1/2	14	1/16	12 13/16	48 1/2	48 5/8	14 1/8	31 7/8	44 1/2	14 1/2	33 7/16	46 1/2
FC & BI	30	30	1 3/16	1/2 X 1/4	20 3/4	22 13/16	29 13/16	30 7/8	24 1/4	32	31	8 3/8	4	26 7/16	12 1/2	15 1/2	1/16	14 1/8	53 7/8	53 5/8	16 1/2	35 3/4	49 7/8	16 1/2	37 3/4	51 7/8

NOTE: All dimensions subject to change without notice Where exact dimensions are required write for certified drawings

ROUGHING-IN DIMENSIONS — ARRANGEMENT 1 — SIZES 18-30

BOTTOM HORIZONTAL DISCHARGE

FIGURE RI-3

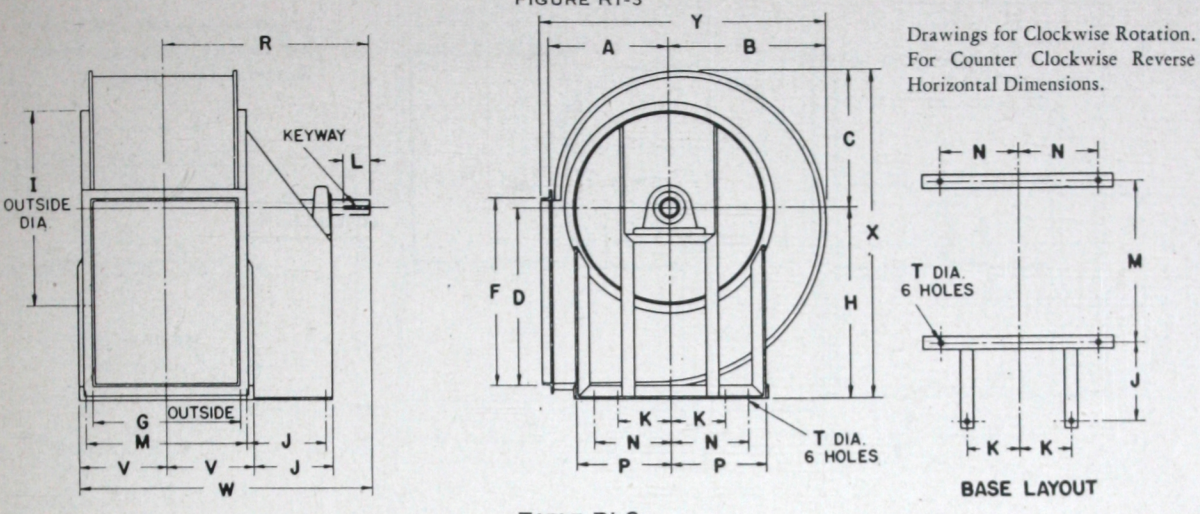

Drawings for Clockwise Rotation. For Counter Clockwise Reverse Horizontal Dimensions.

TABLE RI-3

FAN TYPE	FAN SIZE	WHEEL DIAM.	SHAFT DIAM.	KEY WAY	A	B	C	D	F	G	H	I	K	L	M	N	P	T	V	X	Y	BALL BEARING J	BALL BEARING R	BALL BEARING W	OIL RING SLEEVE BEARING J	OIL RING SLEEVE BEARING R	OIL RING SLEEVE BEARING W
FC & BI	18	18	1 7/16	3/8 X 3/16	12 7/8	15 13/16	13 7/8	17 13/16	18 3/8	14 3/8	19	19	6 3/8	2 1/2	16 1/16	7 1/2	9 1/4	1/16	8 3/8	32 7/8	29 1/16	9 1/2	21 3/8	30 1/4	12 1/2	26	34 7/8
FC & BI	21	21	1 7/16	3/8 X 3/16	14 7/8	18 1/16	16 1/8	20 7/8	21 7/8	17	22	22	6 7/8	2 1/2	18 1/16	8 7/8	10 7/8	1/16	10	38 1/8	34 1/16	11	24 1/8	34 3/8	12 1/2	27 1/4	37 1/4
FC & BI	24	24	1 1/16	3/8 X 3/16	16 3/8	20 1/16	18 3/8	23 5/8	24 7/8	19 3/4	26	25	7 3/8	3 1/2	21 1/16	10 1/2	12 1/2	1/16	11 3/4	44 3/8	38 1/16	12 1/2	28 1/4	40	13 1/2	31 1/4	43
FC & BI	27	27	1 3/16	3/8 X 3/16	18 3/4	23 1/2	20 11/16	26 11/16	27 7/8	21 11/16	29	28	7 7/8	3 1/2	23 7/8	11 1/2	14	1/16	12 11/16	49 11/16	43	14 1/2	31 7/16	44 1/2	14 1/2	33 7/16	46 1/2
FC & BI	30	30	1 3/16	1/4 X 1/4	20 3/4	26	22 13/16	29 11/16	30 7/8	24 1/4	32	31	8 3/8	4	26 7/16	12 1/2	15 1/2	1/16	14 1/16	54 11/16	47 7/8	16 1/2	35 1/4	49 7/8	16 1/2	37 1/4	51 7/8

DOWN-BLAST DISCHARGE

FIGURE RI-4

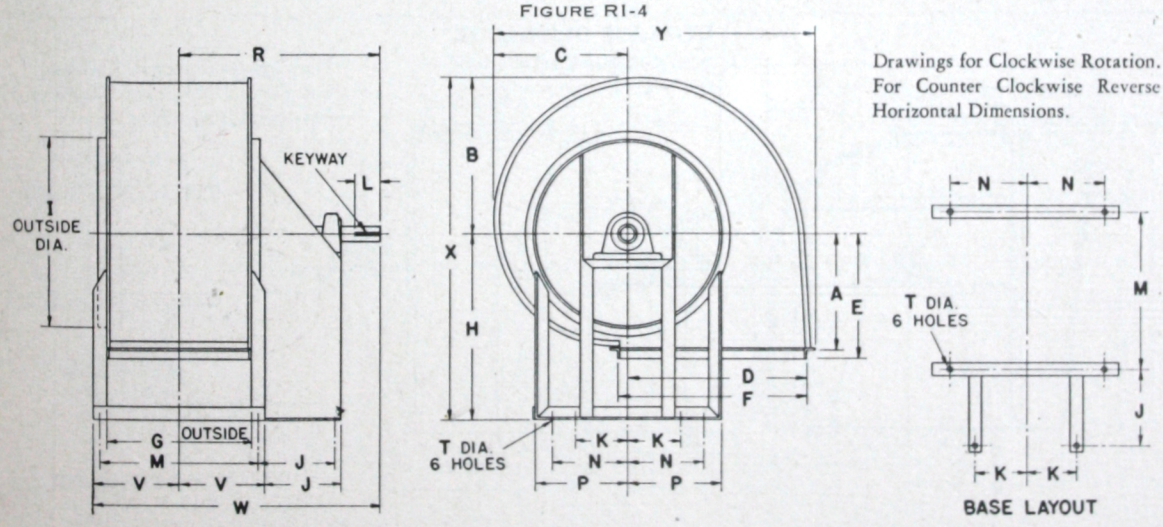

Drawings for Clockwise Rotation. For Counter Clockwise Reverse Horizontal Dimensions.

TABLE RI-4

FAN TYPE	FAN SIZE	WHEEL DIAM.	SHAFT DIAM.	KEY WAY	A	B	C	D	E	F	G	H	I	K	L	M	N	P	T	V	X	Y	BALL BEARING J	BALL BEARING R	BALL BEARING W	OIL RING SLEEVE BEARING J	OIL RING SLEEVE BEARING R	OIL RING SLEEVE BEARING W
FC & BI	18	18	1 7/16	3/8 X 3/16	12 7/8	15 13/16	13 7/8	17 13/16	13 3/4	18 7/8	14 3/8	19	19	6 3/8	2 1/2	16 1/16	7 1/2	9 1/4	1/16	8 3/8	34 13/16	32 1/16	9 1/2	21 3/8	30 1/4	12 1/2	26	34 7/8
FC & BI	21	21	1 7/16	3/8 X 3/16	14 7/8	18 1/16	16 1/8	20 7/8	15 3/4	21 7/8	17	22	22	6 7/8	2 1/2	18 1/16	8 7/8	10 7/8	1/16	10	40 1/16	37 7/16	11	24 1/8	34 3/8	12 1/2	27 1/4	37 1/4
FC & BI	24	24	1 1/16	3/8 X 3/16	16 3/8	20 1/16	18 3/8	23 5/8	17 1/2	24 7/8	19 3/8	26	25	7 3/8	3 1/2	21 1/16	10 1/2	12 1/2	1/16	11 1/4	46 1/16	43 3/16	12 1/2	28 1/4	40	13 1/2	31 1/4	43
FC & BI	27	27	1 3/16	3/8 X 3/16	18 3/4	23 1/2	20 11/16	26 11/16	19 1/2	27 7/8	21 11/16	29	28	7 7/8	3 1/2	23 7/8	11 1/2	14	1/16	12 11/16	52 1/16	48 5/16	14 1/2	31 7/16	44 1/2	14 1/2	33 7/16	46 1/2
FC & BI	30	30	1 3/16	1/4 X 1/4	20 3/4	26	22 13/16	29 11/16	21 7/8	30 7/8	24 1/4	32	31	8 3/8	4	26 7/16	12 1/2	15 1/2	1/16	14 1/16	58	53 5/16	16 1/2	35 1/4	49 7/8	16 1/2	37 1/4	51 7/8

NOTE: All dimensions subject to change without notice. Where exact dimensions are required write for certified drawings.

ROUGHING-IN DIMENSIONS — ARRANGEMENT 1 — SIZES 33-89

TOP HORIZONTAL DISCHARGE

FIGURE RI-5

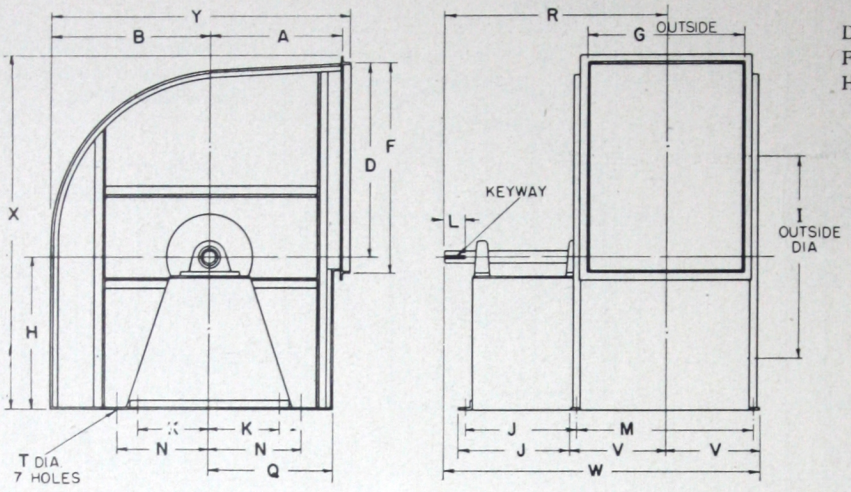

Drawings for Clockwise Rotation. For Counter Clockwise Reverse Horizontal Dimensions.

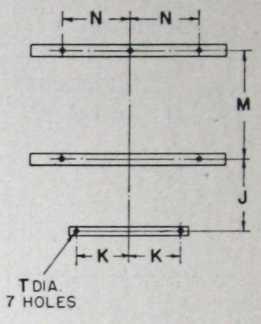

BASE LAYOUT

TABLE RI-5

FAN TYPE	FAN SIZE	WHEEL DIAM.	SHAFT DIAM.	KEY WAY	A	B	D	F	G	H	I	J	K	L	M	N	Q	T	V	X	Y	BALL BEARING R	BALL BEARING W	Oil Ring Sleeve Bearing R	Oil Ring Sleeve Bearing W
FC & BI	33	33	2 3/16	1/2 X 1/4	23	27 7/8	32 11/16	33 3/8	27	26 1/4	34	18 1/2	13	4	28 1/8	17	21	3/16	15 1/16	60 1/16	52	37 11/16	52 3/4	39 13/16	54 3/8
FC & BI	36	36	2 3/16	1/2 X 1/4	25	30 7/16	35 5/8	36 3/8	29	28 1/4	37	19	14	4	31 1/8	18	22 13/16	1/16	16 1/16	65	56 7/16	40 7/16	56 3/4	42 1/16	58 3/4
FC & BI	40	40 1/4	2 7/16	5/8 X 5/16	28	34 1/8	39 3/4	40 3/4	32 3/8	32 1/4	41 1/4	21	17	5	34 3/8	21	25 3/4	3/4	18 3/16	73 1/8	63 1/4	43 13/16	62 1/8	46 3/16	64 3/4
FC & BI	44	44 1/2	2 7/16	5/8 X 5/16	31	37 1/2	43 7/8	45	35 3/4	35 1/2	45 1/2	23	19	5	37 3/4	23	28 5/16	3/4	19 7/16	80 1/2	69 1/2	48 1/2	68 3/8	51 1/8	71
FC & BI	49	49	2 15/16	3/4 X 3/8	34 1/8	41 1/2	48 3/8	49 1/2	39 1/4	39	50	25 1/2	21	5	42 1/4	25	31 1/2	7/8	22 1/8	88 1/2	76 3/4	54 1/4	76 3/4	57 1/4	79 3/8
FC & BI	54	54	2 15/16	3/4 X 3/8	37	45 3/4	53 1/4	54 1/2	43 1/4	43	55	28	21	6	46 3/4	27	34 1/2	7/8	24 3/8	97 3/8	83 7/8	59 3/4	84 3/8	63	87 5/8
FC & BI	60	60	3 3/16	3/4 X 3/8	41 1/4	50 5/16	59 1/4	60 1/2	48	47 1/2	61	31 1/8	24	6	51 1/2	30	38 7/16	7/8	27	108 1/8	93 1/2	66	93	69 1/4	96 1/4
FC & BI	66	66	3 15/16	1 X 1/2	45 1/8	55 13/16	65 1/8	66 1/2	52 3/4	52	67	35 3/8	27	7	56 1/4	33	41 13/16	7/8	29 3/8	118 1/2	102 5/16	73 3/8	102 3/4	76 5/8	106

UP-BLAST DISCHARGE

FIGURE RI-6

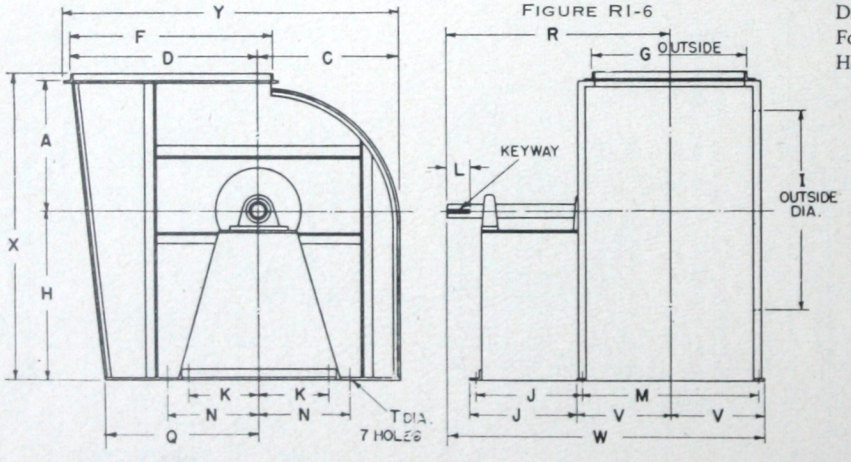

Drawings for Clockwise Rotation. For Counter Clockwise Reverse Horizontal Dimensions.

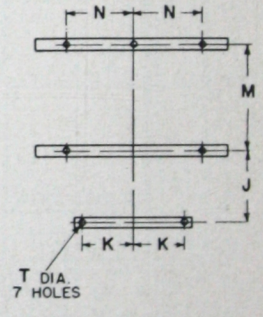

BASE LAYOUT

TABLE RI-6

FAN TYPE	FAN SIZE	WHEEL DIAM.	SHAFT DIAM.	KEY WAY	A	C	D	F	G	H	I	J	K	L	M	N	Q	T	V	X	Y	BALL BEARING R	BALL BEARING W	Oil Ring Sleeve Bearing R	Oil Ring Sleeve Bearing W
FC & BI	33	33	2 3/16	1/2 X 1/4	23	24 7/16	32 11/16	33 3/8	27	30	34	18 1/2	13	4	28 1/8	17	29 1/16	3/16	15 1/16	54 1/8	58 3/4	37 11/16	52 3/4	39 13/16	54 3/8
FC & BI	36	36	2 3/16	1/2 X 1/4	25	26 11/16	35 5/8	36 3/8	29	32	37	19	14	4	31 1/8	18	32 7/16	1/16	16 1/16	58 1/8	63 1/16	40 7/16	56 3/4	42 1/16	58 3/8
FC & BI	40	40 1/4	2 7/16	5/8 X 5/16	28	29 13/16	39 3/4	40 3/4	32 3/8	36 1/2	41 1/4	21	17	5	34 3/8	21	36 7/16	3/4	18 3/16	65 3/8	70 13/16	43 13/16	62 1/8	46 3/16	64 3/4
FC & BI	44	44 1/2	2 7/16	5/8 X 5/16	31	33	43 7/8	45	35 3/4	40	45 1/2	23	19	5	37 3/4	23	40 7/16	3/4	19 7/8	72 1/8	78	48 1/2	68 3/8	51 1/8	71
FC & BI	49	49	2 15/16	3/4 X 3/8	34 1/8	36 5/16	48 3/8	49 1/2	39 1/4	44	50	25 1/2	21	5	42 1/4	25	44 1/4	7/8	22 1/8	79 1/4	85 13/16	54 1/4	76 3/4	57 1/4	79 3/8
FC & BI	54	54	2 15/16	3/4 X 3/8	37	40 1/8	53 1/4	54 1/2	43 1/4	48 3/4	55	28	21	6	46 3/4	27	48 3/4	7/8	24 5/8	86 7/8	94 1/2	59 3/4	84 3/8	63	87 5/8
FC & BI	60	60	3 3/16	3/4 X 3/8	41 1/4	44 5/16	59 1/4	60 1/2	48	54	61	31 1/8	24	6	51 1/2	30	54 3/8	7/8	27	96 3/8	105 7/16	66	93	69 1/4	96 1/4
FC & BI	66	66	3 15/16	1 X 1/2	45 1/8	48 7/16	65 1/8	66 1/2	52 3/4	59	67	35 3/8	27	7	56 1/4	33	59 1/2	7/8	29 3/8	105 1/2	115 3/8	73 3/8	102 3/4	76 5/8	106

* *Diameter for sheave bore.*

NOTE: All dimensions subject to change without notice. Where exact dimensions are required write for certified drawings.

ROUGHING-IN DIMENSIONS — ARRANGEMENT 1 — SIZES 33-89

BOTTOM HORIZONTAL DISCHARGE

FIGURE RI-7

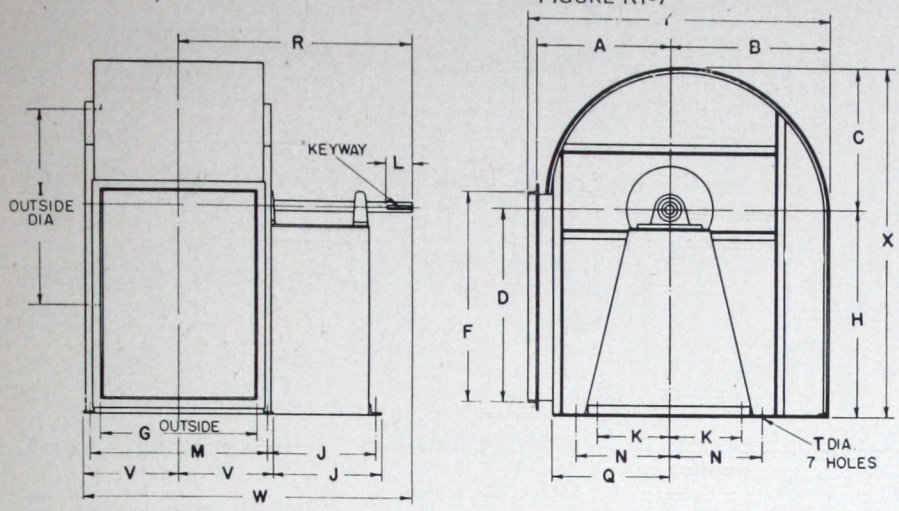

Drawings for Clockwise Rotation. For Counter Clockwise Reverse Horizontal Dimensions.

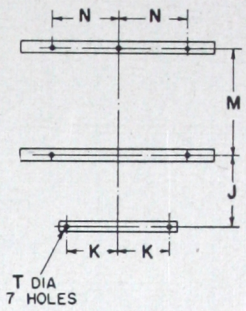

BASE LAYOUT

TABLE RI-7

FAN TYPE	FAN SIZE	WHEEL DIAM.	SHAFT DIAM.	KEY WAY	A	B	C	D	F	G	H	I	J	K	L	M	N	Q	T	V	X	Y	BALL BEARING R	BALL BEARING W	Oil Ring Sleeve Bearing R	Oil Ring Sleeve Bearing W
FC&BI	33	33	2 3/16	1/2 X 1/4	23	27 7/8	24 1/16	32 1/16	33 3/8	27	34 3/4	34	18 1/2	13	4	28 1/8	17	19 7/8	5/16	15 1/16	59 1/16	52	37 11/16	52 3/4	39 13/16	54 7/8
FC&BI	36	36	2 3/16	1/2 X 1/4	25	30 7/16	26 11/16	35 5/8	36 3/8	29	37 3/4	37	19	14	4	31 1/8	18	21 3/4	5/16	16 5/16	64 7/16	56 5/16	40 3/16	56 3/4	42 5/16	58 7/8
FC&BI	40	40 1/4	2 7/16	5/8 X 5/16	28	34 1/8	29 13/16	39 3/4	40 3/4	32 3/8	42 1/4	41 1/4	21	17	5	34 3/8	21	24	3/4	18 7/8	72 7/16	63 1/4	43 13/16	62 1/8	46 5/16	64 3/4
FC&BI	44	44 1/2	2 7/16	5/8 X 5/16	31	37 11/16	33	43 7/8	45	35 3/4	46 1/2	45 1/2	23	19	5	37 3/4	23	26 1/4	3/4	19 7/8	79 1/2	69 13/16	48 1/2	68 3/8	51 1/8	71
FC&BI	49	49	2 15/16	3/4 X 3/8	34 1/8	41 1/2	36 7/16	48 3/8	49 1/2	39 1/4	51	50	25 1/2	21	5	42 1/4	25	28 1/2	7/8	22 1/8	87 7/16	76 3/4	54 1/4	76 5/8	57 1/4	79 3/8
FC&BI	54	54	2 15/16	3/4 X 3/8	37	45 3/4	40 1/8	53 1/4	54 1/2	43 1/4	56 1/4	55	28	21	6	46 3/4	27	31	7/8	24 5/8	96 3/8	83 7/8	59 3/4	84 3/8	63	87 5/8
FC&BI	60	60	3 7/16	3/4 X 3/8	41 1/4	50 7/8	44 5/16	59 1/4	60 1/2	48	62 1/4	61	31 1/8	24	6	51 1/2	30	34 5/16	7/8	27	106 13/16	93 1/2	66	93	69 1/4	96 1/4
FC&BI	66	66	3 13/16	1 X 1/2	45 1/8	55 13/16	48 7/8	65 1/8	66 1/2	52 3/4	68 1/4	67	35 3/8	27	7	56 1/4	33	37 1/4	7/8	29 3/8	117 1/8	102 5/16	73 3/8	102 3/4	76 5/8	106

DOWN-BLAST DISCHARGE

FIGURE RI-8

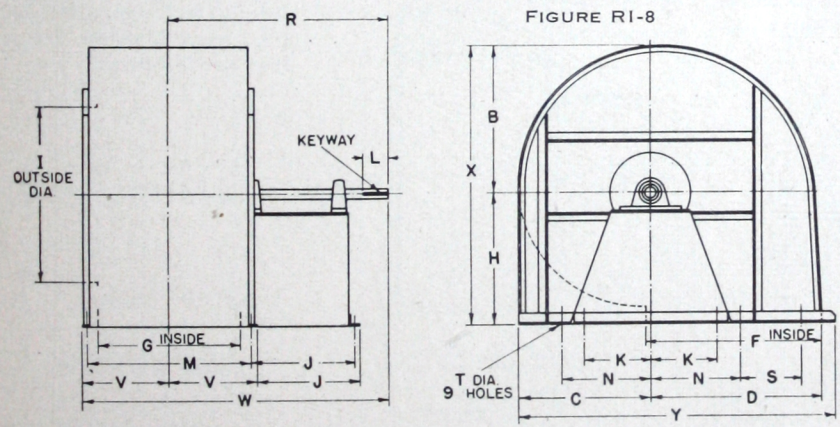

Drawings for Clockwise Rotation. For Counter Clockwise Reverse Horizontal Dimensions.

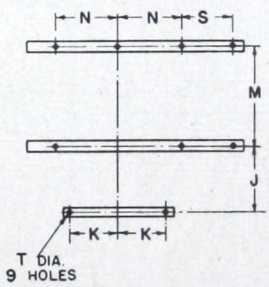

BASE LAYOUT

TABLE RI-8

FAN TYPE	FAN SIZE	WHEEL DIAM.	SHAFT DIAM.	KEY WAY	B	C	D	F	G	H	I	J	K	L	M	N	S	T	V	X	Y	BALL BEARING R	BALL BEARING W	Oil Ring Sleeve Bearing R	Oil Ring Sleeve Bearing W
FC & BI	33	33	2 3/16	1/2 X 1/4	27 7/8	24 1/16	32 1/16	33 1/16	26 3/4	24 1/2	34	17 3/16	13	4	30 3/4	17	13	5/16	16 3/8	52 3/8	59 1/2	37 11/16	52 3/4	39 13/16	54 7/8
FC & BI	36	36	2 3/16	1/2 X 1/4	30 7/16	26 11/16	35 1/2	36 5/16	28 3/4	26	37	18 7/16	14	4	32 3/4	18	14	5/16	17 3/8	56 1/16	64 11/16	40 3/16	56 3/4	42 5/16	58 7/8
FC & BI	40	40 1/4	2 7/16	5/8 X 5/16	34 1/8	29 13/16	39 5/8	40 1/2	32 1/8	28 5/8	41 1/4	20 1/8	17	5	36 1/8	21	14	3/4	19 1/16	62 3/4	72 1/16	43 13/16	62 1/8	46 5/16	64 3/4
FC & BI	44	44 1/2	2 7/16	5/8 X 5/16	37 11/16	33	43 3/4	44 3/4	35 1/2	32	45 1/2	22 1/8	19	5	39 1/2	23	15	3/4	20 3/4	69 11/16	79 1/4	48 1/2	68 3/8	51 1/8	71
FC & BI	49	49	2 15/16	3/4 X 3/8	41 1/2	36 5/16	48 1/4	49 1/4	39	34 3/4	50	25 1/8	21	5	43	25	16	7/8	22 1/2	76 1/4	87 1/16	54 1/4	76 3/8	57 1/4	79 3/8
FC & BI	54	54	2 15/16	3/4 X 3/8	45 3/4	40 1/8	53 1/8	54 1/4	43	37 5/8	55	27 5/8	21	6	47 1/2	27	18	7/8	25	83 3/8	95 3/4	59 3/4	84 3/8	63	87 5/8
FC & BI	60	60	3 7/16	3/4 X 3/8	50 7/8	44 5/16	59 1/8	60 1/4	47 3/4	42 1/8	61	30 3/4	24	6	52 1/4	30	22	7/8	27 3/8	93	106 5/16	66	93	69 1/4	96 1/4
FC & BI	66	66	3 13/16	1 X 1/2	55 13/16	48 7/8	65	66 1/4	52 1/4	46	67	35	27	7	57	33	27	7/8	29 3/4	101 13/16	116 3/8	73 3/8	102 3/4	76 5/8	106

* *Diameter for sheave bore.*

NOTE: All dimensions subject to change without notice. Where exact dimensions are required write for certified drawings.

ROUGHING-IN DIMENSIONS — ARRANGEMENT 2 — SIZES 10-30

TOP HORIZONTAL DISCHARGE

FIGURE RI-9

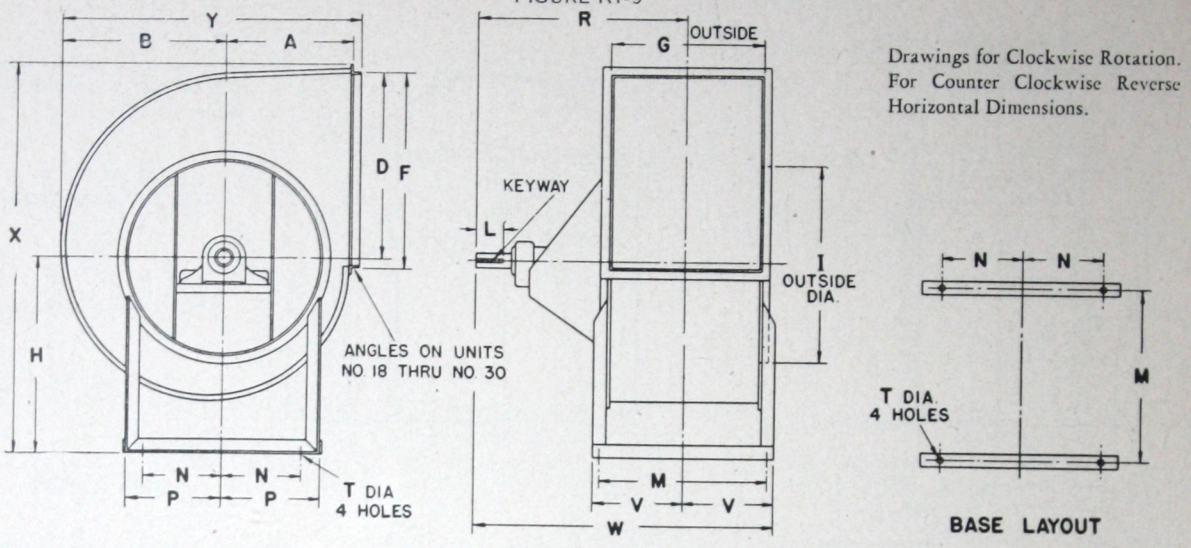

Drawings for Clockwise Rotation. For Counter Clockwise Reverse Horizontal Dimensions.

TABLE RI-9

FAN TYPE	FAN SIZE	WHEEL DIAM.	SHAFT DIAM.	KEY WAY	A	B	D	F	G	H	I	L	M	N	P	R	T	V	W	X	Y
FC ONLY	10	10	1 1/16	1/4 X 1/8	7 1/2	8 3/8	9 3/8	10 5/8	8 1/16	11	10 1/2	1 1/2	9 3/16	3 3/4	5	14	1/2	5 1/16	19 1/8	21 1/4	16 3/8
FC ONLY	12	12	1 1/16	1/4 X 1/8	8 1/2	10 3/4	11 3/8	12 5/8	9 5/8	13	12 1/2	1 1/2	11 1/8	4 1/4	5 3/4	14 3/4	1/2	6 3/16	20 1/8	25 3/8	19 1/8
FC & BI	15	15	1 3/16	1/4 X 1/8	10 5/8	13 1/4	14 1/2	15 5/8	12	16	16	2 1/2	13 3/16	6 1/2	7 3/4	17 1/8	1/2	7 3/8	24 3/16	31 3/16	23 7/8
FC & BI	18	18	1 1/16	3/16 X 1/16	12 7/8	15 1/2	17 1/2	18 7/8	14 5/8	19	19	2 1/2	16 3/16	7 1/2	9 1/4	21 3/16	1/16	8 7/8	30	37 1/16	29 1/16
FC & BI	21	21	1 7/16	3/16 X 3/16	14 7/8	18 5/16	20 7/8	21 7/8	17	22	22	2 1/2	18 3/16	8 7/8	10 7/8	22 3/16	1/16	10	32 3/16	43 1/4	34 1/16
FC & BI	24	24	1 1/16	3/16 X 1/16	16 3/16	20 1/8	23 5/16	24 7/16	19 3/16	26	25	3 1/2	21 1/16	10 1/2	12 1/2	22 1/8	1/16	11 1/4	34 1/16	50 1/4	38 1/16
FC & BI	27	27	1 1/16	3/16 X 3/16	18 3/16	23 1/2	26 1/8	27 7/8	21 1/16	29	28	3 1/2	23 7/8	11 1/2	14	26 7/16	1/16	12 1/8	39 1/2	56 1/8	43
FC & BI	30	30	1 1/16	1/2 X 1/4	20 1/4	26	29 1/16	30 7/8	24 1/4	32	31	4	26 3/16	12 1/2	15 1/2	27 1/16	1/16	14 1/8	42	62 1/16	47 7/8

UP-BLAST DISCHARGE

FIGURE RI-10

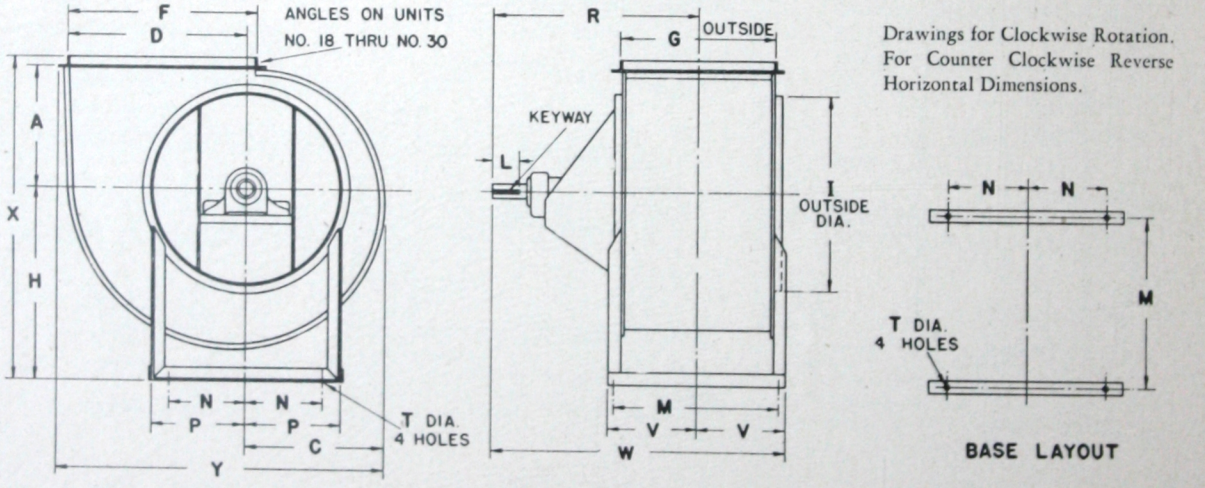

Drawings for Clockwise Rotation. For Counter Clockwise Reverse Horizontal Dimensions.

TABLE RI-10

FAN TYPE	FAN SIZE	WHEEL DIAM.	SHAFT DIAM.	KEY WAY	A	C	D	F	G	H	I	L	M	N	P	R	T	V	W	X	Y
FC ONLY	10	10	1 1/16	1/4 X 1/8	7 1/2	7 3/8	9 3/8	10 5/8	8 1/16	11	10 1/2	1 1/2	9 3/16	3 3/4	5	14	1/2	5 1/16	19 1/8	18 1/2	18 1/8
FC ONLY	12	12	1 1/16	1/4 X 1/8	8 1/2	9 1/16	11 3/8	12 5/8	9 5/8	13	12 1/2	1 1/2	11 1/8	4 1/4	5 3/4	14 3/4	1/2	6 3/16	20 1/8	21 1/8	21 1/8
FC & BI	15	15	1 3/16	1/4 X 1/8	10 5/8	11 5/8	14 1/2	15 5/8	12	16	16	2 1/2	13 3/16	6 1/2	7 3/4	17 1/8	1/2	7 3/8	24 3/16	26 5/8	26 1/8
FC & BI	18	18	1 1/16	3/16 X 1/16	12 7/8	13 7/8	17 1/2	18 7/8	14 5/8	19	19	2 1/2	16 3/16	7 1/2	9 1/4	21 3/16	1/16	8 7/8	30	32 3/4	32 3/16
FC & BI	21	21	1 7/16	3/16 X 1/16	14 7/8	16 1/8	20 7/8	21 7/8	17	22	22	2 1/2	18 3/16	8 7/8	10 7/8	22 3/16	1/16	10	32 3/8	37 3/4	37 7/8
FC & BI	24	24	1 1/16	3/16 X 3/16	16 3/16	18 3/8	23 5/16	24 7/16	19 3/16	26	25	3 1/2	21 1/16	10 1/2	12 1/2	22 1/8	1/16	11 1/4	34 1/16	43 1/2	43 1/16
FC & BI	27	27	1 1/16	3/16 X 1/16	18 3/16	20 1/16	26 1/8	27 7/8	21 1/16	29	28	3 1/2	23 7/8	11 1/2	14	26 7/16	1/16	12 1/8	39 1/2	48 1/2	48 5/16
FC & BI	30	30	1 1/16	1/2 X 1/4	20 1/4	22 1/16	29 1/16	30 7/8	24 1/4	32	31	4	26 3/16	12 1/2	15 1/2	27 1/16	1/16	14 1/8	42	53 7/8	53 5/8

NOTE: All dimensions subject to change without notice. Where exact dimensions are required write for certified drawings.

ROUGHING-IN DIMENSIONS — ARRANGEMENT 2 — SIZES 10-30

BOTTOM HORIZONTAL DISCHARGE

FIGURE RI-11

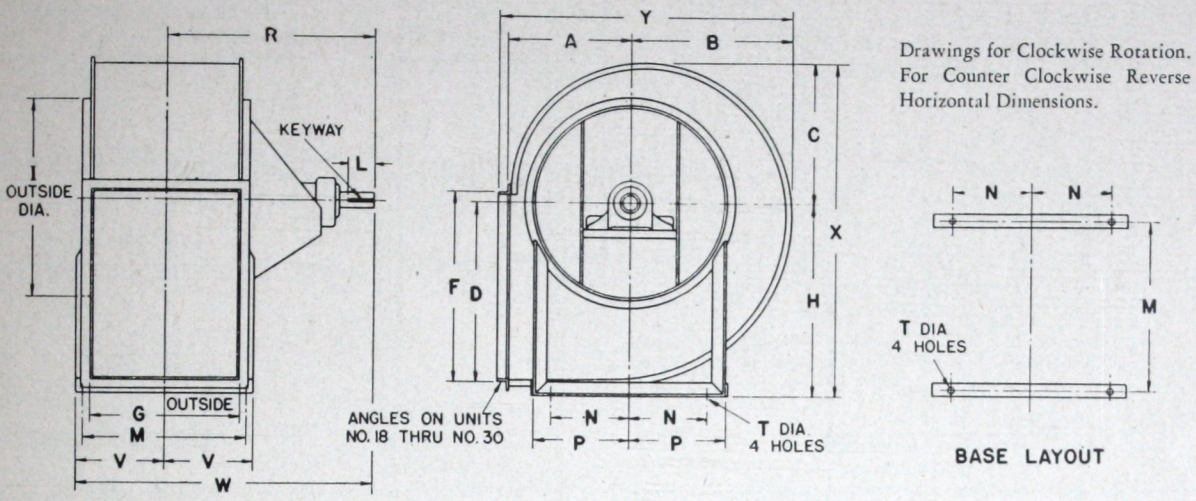

TABLE RI-11

FAN TYPE	FAN SIZE	WHEEL DIAM.	SHAFT DIAM.	KEY WAY	A	B	C	D	F	G	H	I	L	M	N	P	R	T	V	W	X	Y
FC ONLY	10	10	1 1/16	1/4 X 1/8	7 1/2	8 7/8	7 7/8	9 7/8	10 5/8	8 1/16	11	10 1/2	1 1/2	9 5/16	3 3/4	5	14	1/2	5 1/8	19 1/8	18 7/8	16 3/8
FC ONLY	12	12	1 1/16	1/4 X 1/8	8 1/2	10 3/4	9 7/16	11 7/8	12 5/8	9 5/8	13	12 1/2	1 1/2	11 1/8	4 1/4	5 3/4	14 3/4	1/2	6 3/16	20 1/8	22 1/16	19 1/16
FC & BI	15	15	1 3/16	1/4 X 1/8	10 5/8	13 1/4	11 5/8	14 1/8	15 5/8	12	16	2 1/2	13 1/16	6 1/2	7 3/4	17 1/8	1/2	7 3/16	24 5/16	27 5/8	23 7/8
FC & BI	18	18	1 7/16	3/8 X 3/16	12 7/8	15 1/8	13 7/8	17 1/8	18 7/8	14 3/8	19	19	2 1/2	16 1/16	7 1/2	9 1/4	21 5/16	5/16	8 7/8	30	32 7/8	29 5/16
FC & BI	21	21	1 7/16	3/8 X 3/16	14 7/8	18 5/16	16 1/8	20 7/8	21 7/8	17	22	22	2 1/2	18 1/16	8 7/8	10 7/8	22 1/16	7/16	10	32 3/8	38 1/8	34 1/16
FC & BI	24	24	1 11/16	3/8 X 3/16	16 3/8	20 1/16	18 3/8	23 5/8	24 7/8	19 3/8	26	25	3 1/2	21 1/16	10 1/2	12 1/2	22 1/16	5/16	11 3/4	34 1/16	44 3/8	38 1/16
FC & BI	27	27	1 15/16	3/8 X 3/16	18 3/8	23 1/2	20 11/16	26 13/16	27 7/8	21 13/16	29	28	3 1/2	23 7/8	11 1/2	14	26 7/8	5/16	12 1/8	39 1/16	49 1/16	43
FC & BI	30	30	1 15/16	1/2 X 1/4	20 3/4	26	22 13/16	29 11/16	30 7/8	24 1/4	32	31	4	26 5/16	12 1/4	15 1/2	27 13/16	5/16	14 1/8	42	54 13/16	47 7/8

DOWN-BLAST DISCHARGE

FIGURE RI-12

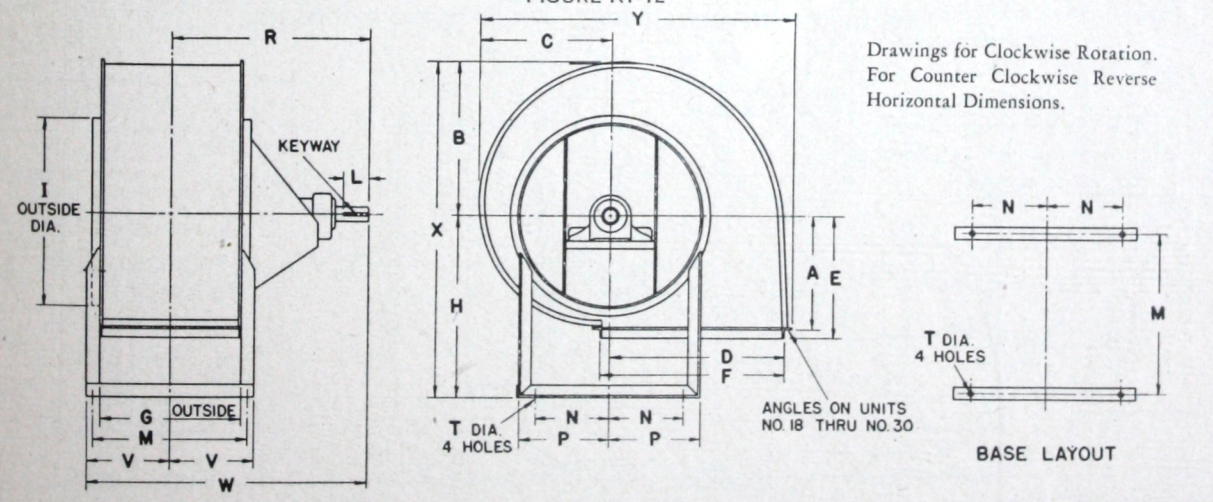

TABLE RI-12

FAN TYPE	FAN SIZE	WHEEL DIAM.	SHAFT DIAM.	KEY WAY	A	B	C	D	E	F	G	H	I	L	M	N	P	R	T	V	W	X	Y
FC ONLY	10	10	1 1/16	1/4 X 1/8	7 1/2	8 7/8	7 7/8	9 7/8	7 1/2	10 5/8	8 1/16	11	10 1/2	1 1/2	9 5/16	3 3/4	5	14	1/2	5 1/8	19 1/8	19 7/8	18 1/8
FC ONLY	12	12	1 1/16	1/4 X 1/8	8 1/2	10 3/4	9 7/16	11 7/8	8 1/2	12 5/8	9 5/8	13	12 1/2	1 1/2	11 1/8	4 1/4	5 3/4	14 3/4	1/2	6 3/16	20 1/8	23 3/4	21 1/2
FC & BI	15	15	1 3/16	1/4 X 1/8	10 5/8	13 1/4	11 5/8	14 1/8	10 5/8	15 5/8	12	16	16	2 1/2	13 1/16	6 1/2	7 3/4	17 1/8	1/2	7 3/16	24 5/16	29 1/4	26 1/2
FC & BI	18	18	1 7/16	3/8 X 3/16	12 7/8	15 1/8	13 7/8	17 1/8	13 3/4	18 7/8	14 3/8	19	19	2 1/2	16 1/16	7 1/2	9 1/4	21 5/16	5/16	8 7/8	30	34 1/8	32 1/16
FC & BI	21	21	1 7/16	3/8 X 3/16	14 7/8	18 5/16	16 1/8	20 7/8	15 3/4	21 7/8	17	22	22	2 1/2	18 1/16	8 7/8	10 7/8	22 1/16	7/16	10	32 3/8	40 5/16	37 7/8
FC & BI	24	24	1 11/16	3/8 X 3/16	16 3/8	20 1/16	18 3/8	23 5/8	17 1/2	24 7/8	19 3/8	26	25	3 1/2	21 1/16	10 1/2	12 1/2	22 1/16	7/16	11 3/4	34 1/16	46 1/16	43 1/16
FC & BI	27	27	1 15/16	3/8 X 3/16	18 3/8	23 1/2	20 11/16	26 13/16	19 1/2	27 7/8	21 13/16	29	28	3 1/2	23 7/8	11 1/2	14	26 7/8	5/16	12 1/8	39 1/16	52 1/2	48 3/16
FC & BI	30	30	1 15/16	1/2 X 1/4	20 3/4	26	22 13/16	29 11/16	21 7/8	30 7/8	24 1/4	32	31	4	26 5/16	12 1/2	15 1/2	27 13/16	5/16	14 1/8	42	58	53 3/8

NOTE: All dimensions subject to change without notice. Where exact dimensions are required write for certified drawings.

ROUGHING-IN DIMENSIONS — ARRANGEMENT 3 — SIZES 6-30

SINGLE WIDTH SINGLE INLET — TOP HORIZONTAL DISCHARGE

FIGURE RI-13

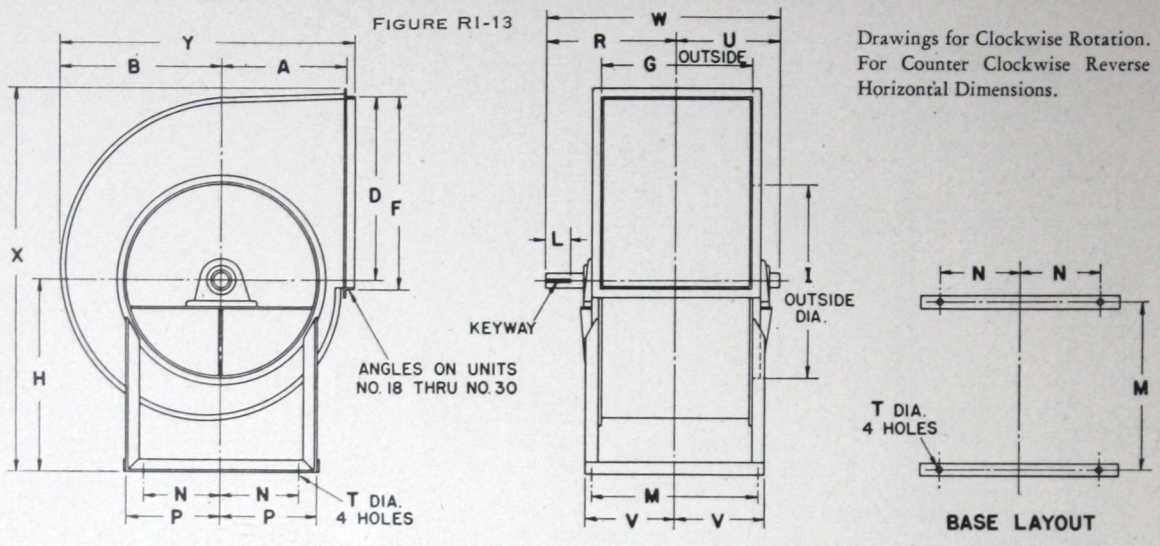

Drawings for Clockwise Rotation. For Counter Clockwise Reverse Horizontal Dimensions.

TABLE RI-13

FAN TYPE	FAN SIZE	WHEEL DIAM.	SHAFT DIAM.	KEY WAY	A	B	D	F	G	H	I	L	M	N	P	T	V	X	Y	BALL BEARING R	BALL BEARING U	BALL BEARING W	SLEEVE BEARING R	SLEEVE BEARING U	SLEEVE BEARING W
FC ONLY	8	8	5/8	NONE	6 1/4	7 1/4	8 1/16	8 5/16	6 1/2	9	8 1/2		7 5/16	3	4	1/2	4 1/16	17 7/16	13 1/2	7 1/8	5 1/4	12 3/16	8	5 5/8	13 5/8
FC ONLY	10	10	1/8	1/4 X 1/8	7 1/2	8 7/8	9 7/16	10 5/16	8 1/16	11	10 1/2	1 1/2	9 1/16	3 1/4	5	1/2	5 1/16	21 1/4	16 3/16	8	6 1/16	14 1/16	9 1/16	7 1/16	16 1/2
FC ONLY	12	12	1/8	1/4 X 1/8	8 1/8	10 3/4	11 7/16	12 5/16	9 5/8	13	12 1/2	1 1/2	11 1/16	4 1/4	5 3/4	1/2	6 1/16	25 5/16	19 1/16	8 1/8	6 1/8	15 7/8	10 3/8	7 7/8	18 1/4
FC & BI	15	15	1 1/16	1/4 X 1/8	10 5/8	13 1/4	14 1/8	15 5/16	12	16	16	2 1/2	13 1/16	6 1/2	7 3/4	1/2	7 1/16	31 1/16	23 1/16	11 1/16	8 1/16	20	13 1/16	9 1/16	23
FC & BI	18	18	1 1/16	3/16 X 1/16	12 7/8	15 1/8	17 1/8	18 7/16	14 5/8	19	19	2 1/2	16 1/16	7 1/2	9 1/4	1/16	8 7/16	37 1/16	29 1/16	12 3/4	9 7/16	22 5/8	17	14 1/16	31 1/16
FC & BI	21	21	1 1/16	3/16 X 1/16	14 7/8	18 1/16	20 7/8	21 7/8	17	22	22	2 1/2	18 1/16	8 7/8	10 7/8	1/16	10	43 3/4	34 1/16	13 11/16	11 1/16	25	18 1/4	15 3/8	33 5/8
FC & BI	24	24	1 1/16	3/16 X 1/16	16 5/8	20 1/16	23 5/8	24 7/8	19 5/8	26	25	3 1/2	21 1/16	10 1/2	12 1/2	1/16	11 1/4	50 3/4	38 1/16	16 1/16	12 1/16	28 1/2	19 1/16	15 1/16	35 1/2
FC & BI	27	27	1 1/16	3/8 X 1/16	18 3/8	23 1/2	26 1/16	27 7/16	21 1/16	29	28	3 1/2	23 7/16	11 1/2	14	1/16	12 1/16	56 1/16	43	17 1/4	13 3/4	31 1/2	20 1/16	16 1/16	37
FC & BI	30	30	1 1/16	1/4 X 1/4	20 3/4	26	29 1/16	30 7/16	24 1/4	32	31	4	26 1/16	12 1/2	15 1/2	1/16	14 1/16	62 1/16	47 3/16	20 1/4	15	35 1/4	22 1/2	17 3/4	40 1/4

SINGLE WIDTH SINGLE INLET — UP-BLAST DISCHARGE

FIGURE RI-14

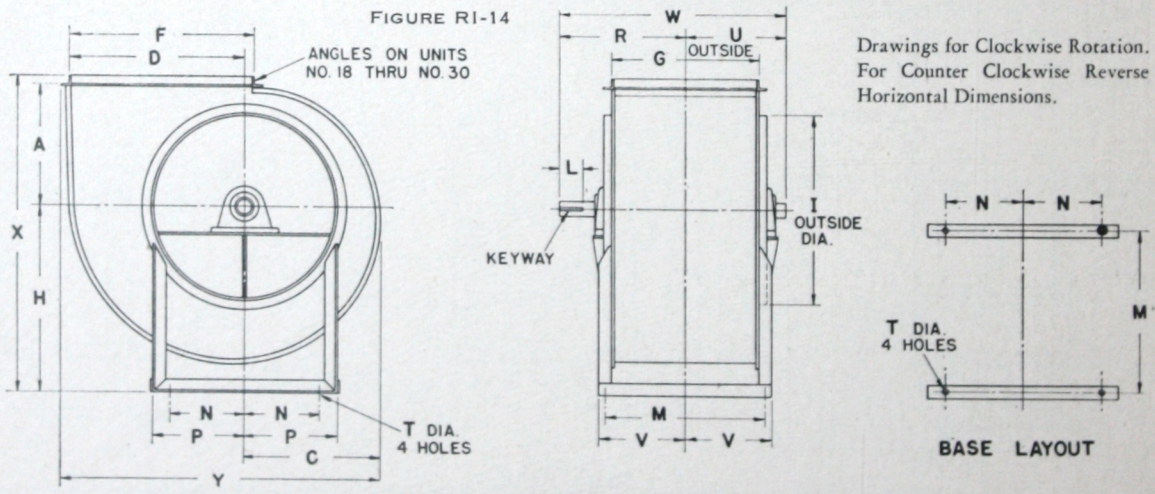

Drawings for Clockwise Rotation. For Counter Clockwise Reverse Horizontal Dimensions.

TABLE RI-14

FAN TYPE	FAN SIZE	WHEEL DIAM.	SHAFT DIAM.	KEY WAY	A	C	D	F	G	H	I	L	M	N	P	T	V	X	Y	BALL BEARING R	BALL BEARING U	BALL BEARING W	SLEEVE BEARING R	SLEEVE BEARING U	SLEEVE BEARING W
FC ONLY	8	8	5/8	NONE	6 1/4	6 5/16	8 1/16	8 5/16	6 1/2	9	8 1/2		7 5/16	3	4	1/2	4 1/16	15 1/4	14 13/16	7 1/8	5 1/4	12 3/16	8	5 5/8	13 5/8
FC ONLY	10	10	1/8	1/4 X 1/8	7 1/2	7 7/8	9 1/16	10 5/16	8 1/16	11	10 1/2	1 1/2	9 1/16	3 1/4	5	1/2	5 1/16	18 1/2	18 1/16	8	6 1/16	14 1/16	9 1/16	7 1/16	16 1/2
FC ONLY	12	12	1/8	1/4 X 1/8	8 1/8	9 1/16	11 7/16	12 5/16	9 5/8	13	12 1/2	1 1/2	11 1/16	4 1/4	5 3/4	1/2	6 1/16	21 1/16	21 1/16	8 1/16	6 1/16	15 7/16	10 3/16	7 7/16	18 1/4
FC & BI	15	15	1 1/16	1/4 X 1/8	10 5/8	11 5/8	14 1/16	15 5/16	12	16	16	2 1/2	13 1/16	6 1/2	7 3/4	1/2	7 1/16	26 5/16	26 1/16	11 1/16	8 1/16	20	13 1/16	9 1/16	23
FC & BI	18	18	1 1/16	3/16 X 1/16	12 7/8	13 7/16	17 1/16	18 7/16	14 5/8	19	19	2 1/2	16 1/16	7 1/2	9 1/4	1/16	8 7/16	32 1/4	32 1/16	12 3/4	9 7/16	22 5/8	17	14 1/16	31 1/16
FC & BI	21	21	1 1/16	3/16 X 1/16	14 7/8	16 1/16	20 7/8	21 7/8	17	22	22	2 1/2	18 1/16	8 7/8	10 7/8	1/16	10	37 3/4	37 1/16	13 11/16	11 1/16	25	18 1/4	15 3/8	33 5/8
FC & BI	24	24	1 1/16	3/16 X 1/16	16 5/8	18 1/16	23 5/8	24 7/8	19 5/8	26	25	3 1/2	21 1/16	10 1/2	12 1/2	1/16	11 1/4	43 1/2	43 1/16	16 1/16	12 1/16	28 1/2	19 1/16	15 1/16	35 1/2
FC & BI	27	27	1 1/16	3/8 X 1/16	18 3/8	20 1/16	26 1/16	27 7/16	21 1/16	29	28	3 1/2	23 7/16	11 1/2	14	1/16	12 1/16	48 1/2	48 5/16	17 1/4	13 3/4	31 1/2	20 1/16	16 1/16	37
FC & BI	30	30	1 1/16	1/4 X 1/4	20 3/4	22 1/16	29 1/16	30 7/16	24 1/4	32	31	4	26 1/16	12 1/2	15 1/2	1/16	14 1/16	53 7/16	53 5/16	20 1/4	15	35 1/4	22 1/2	17 3/4	40 1/4

NOTE: All dimensions subject to change without notice. Where exact dimensions are required write for certified drawings.

ROUGHING-IN DIMENSIONS — ARRANGEMENT 3 — SIZES 6-30

SINGLE WIDTH SINGLE INLET — BOTTOM HORIZONTAL DISCHARGE

FIGURE RI-15

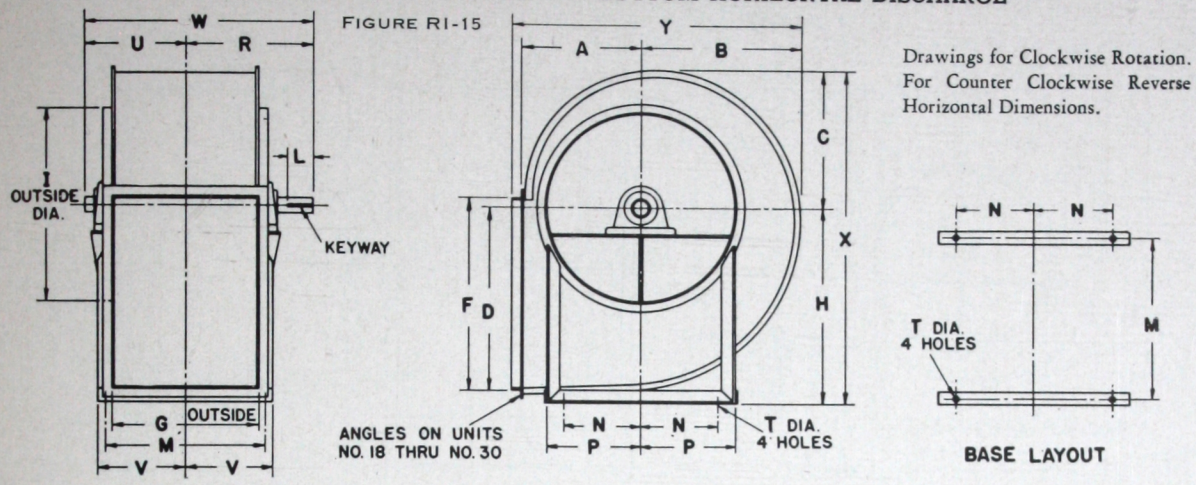

Drawings for Clockwise Rotation. For Counter Clockwise Reverse Horizontal Dimensions.

TABLE RI-15

FAN TYPE	FAN SIZE	WHEEL DIAM.	SHAFT DIAM.	KEY WAY	A	B	C	D	F	G	H	I	L	M	N	P	T	V	X	Y	BALL BEARING R	BALL BEARING U	BALL BEARING W	SLEEVE BEARING R	SLEEVE BEARING U	SLEEVE BEARING W
FC ONLY	8	8	5/8	NONE	6 1/4	7 1/4	6 3/8	8 1/16	8 5/8	6 1/2	9	8 1/2		7 5/8	3	4	1/2	4 1/16	15 3/8	13 1/2	7 1/8	5 1/4	12 3/8	8	5 5/8	13 5/8
FC ONLY	10	10	1 1/8	1/4 X 1/8	7 1/2	8 7/8	7 7/8	9 7/8	10 5/8	8 1/16	11	10 1/2	1 1/2	9 1/16	3 3/4	5	1/2	5 1/8	18 7/8	16 3/8	8	6 1/8	14 1/8	9 1/16	7 1/16	16 1/2
FC ONLY	12	12	1 1/8	1/4 X 1/8	8 1/2	10 3/4	9 1/16	11 7/8	12 5/8	9 5/8	13	12 1/2	1 1/2	11 1/8	4 1/4	5 3/4	1/2	6 1/16	22 1/16	19 1/16	8 1/8	6 1/8	15 7/8	10 3/8	7 7/8	18 1/4
FC & BI	15	15	1 1/16	1/4 X 1/8	10 5/8	13 1/4	11 5/8	14 1/8	15 5/8	12	16	16	2 1/2	13 1/16	6 1/2	7 3/4	1/2	7 3/8	27 5/8	23 7/8	11 1/16	8 1/16	20	13 1/16	9 1/16	23
FC & BI	18	18	1 7/16	3/8 X 3/16	12 7/8	15 1/8	13 7/8	17 1/8	18 7/8	14 5/8	19	19	2 1/2	16 1/16	7 1/2	9 1/4	1/16	8 7/8	32 7/8	29 1/16	12 3/4	9 7/8	22 5/8	17	14 1/8	31 1/8
FC & BI	21	21	1 7/16	3/8 X 3/16	14 7/8	18 1/16	16 1/8	20 7/8	21 7/8	17	22	22	2 1/2	18 1/16	8 1/8	10 7/8	1/16	10	38 1/8	34 1/16	13 1/8	11 1/16	25	18 1/4	15 3/8	33 5/8
FC & BI	24	24	1 11/16	3/8 X 3/16	16 3/8	20 1/8	18 3/8	23 5/8	24 7/8	19 3/8	26	25	3 1/2	21 1/16	10 1/2	12 1/2	1/16	11 3/4	44 3/8	38 1/16	16 1/16	12 1/16	28 1/2	19 1/8	15 1/8	35 1/2
FC & BI	27	27	1 1/8	3/8 X 3/16	18 3/8	23 1/4	20 1/8	26 1/8	27 7/8	21 1/8	29	28	3 1/2	23 7/8	11 1/2	14	1/16	12 1/8	49 1/8	43	17 3/4	13 3/4	31 1/2	20 1/16	16 1/16	37
FC & BI	30	30	1 1/8	1/2 X 1/4	20 3/4	26	22 1/8	29 1/8	30 7/8	24 1/4	32	31	4	26 1/16	12 1/2	15 1/2	1/16	14 1/8	54 1/2	47 7/8	20 1/4	15	35 1/4	22 1/2	17 3/4	40 1/4

SINGLE WIDTH SINGLE INLET — DOWN-BLAST DISCHARGE

FIGURE RI-16

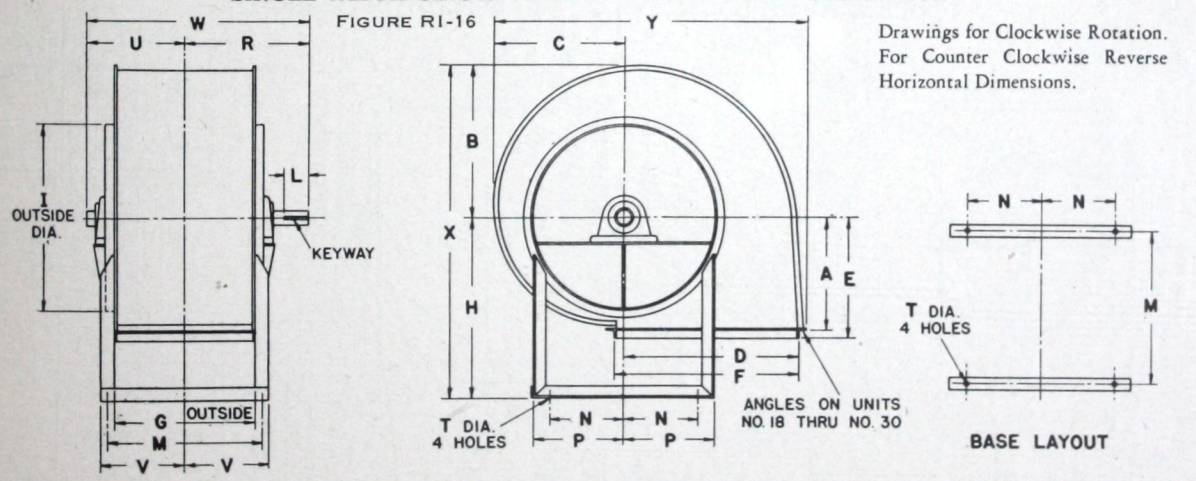

Drawings for Clockwise Rotation. For Counter Clockwise Reverse Horizontal Dimensions.

TABLE RI-16

FAN TYPE	FAN SIZE	WHEEL DIAM.	SHAFT DIAM.	KEY WAY	A	B	C	D	E	F	G	H	I	L	M	N	P	T	V	X	Y	BALL BEARING R	BALL BEARING U	BALL BEARING W	SLEEVE BEARING R	SLEEVE BEARING U	SLEEVE BEARING W
FC Only	8	8	5/8	NONE	6 1/4	7 1/4	6 3/8	8 1/16	6 1/4	8 5/8	6 1/2	9	8 1/2		7 5/8	3	4	1/2	4 1/16	16 1/4	14 1/2	7 1/8	5 1/4	12 3/8	8	5 5/8	13 5/8
FC Only	10	10	1 1/8	1/4 X 1/8	7 1/2	8 7/8	7 7/8	9 7/8	7 1/2	10 5/8	8 1/16	11	10 1/2	1 1/2	9 1/16	3 3/4	5	1/2	5 1/8	19 7/8	18 1/8	8	6 1/8	14 1/8	9 1/16	7 1/16	16 1/2
FC Only	12	12	1 1/8	1/4 X 1/8	8 1/2	10 3/4	9 1/16	11 7/8	8 1/2	12 5/8	9 5/8	13	12 1/2	1 1/2	11 1/8	4 1/4	5 3/4	1/2	6 1/16	23 3/4	21 1/2	8 1/8	6 1/8	15 7/8	10 3/8	7 7/8	18 1/4
FC&BI	15	15	1 1/16	1/4 X 1/8	10 5/8	13 1/4	11 5/8	14 1/8	10 5/8	15 5/8	12	16	16	2 1/2	13 1/16	6 1/2	7 3/4	1/2	7 3/8	29 1/4	26 1/8	11 1/16	8 1/16	20	13 1/16	9 1/16	23
FC&BI	18	18	1 7/16	3/8 X 3/16	12 7/8	15 1/8	13 7/8	17 1/8	13 3/4	18 7/8	14 5/8	19	19	2 1/2	16 1/16	7 1/2	9 1/4	1/16	8 7/8	34 1/8	32 1/16	12 3/4	9 7/8	22 5/8	17	14 1/8	31 1/8
FC&BI	21	21	1 7/16	3/8 X 3/16	14 7/8	18 1/16	16 1/8	20 7/8	15 3/4	21 7/8	17	22	22	2 1/2	18 1/16	8 1/8	10 7/8	1/16	10	40 1/16	37 1/8	13 1/8	11 1/16	25	18 1/4	15 3/8	33 5/8
FC&BI	24	24	1 11/16	3/8 X 3/16	16 3/8	20 1/8	18 3/8	23 5/8	17 1/2	24 7/8	19 3/8	26	25	3 1/2	21 1/16	10 1/2	12 1/2	1/16	11 3/4	46 1/8	43 1/16	16 1/16	12 1/16	28 1/2	19 1/8	15 1/8	35 1/2
FC&BI	27	27	1 1/8	3/8 X 3/16	18 3/8	23 1/2	20 1/8	26 1/8	19 1/2	27 7/8	21 1/8	29	28	3 1/2	23 7/8	11 1/2	14	1/16	12 1/8	52 1/2	48 5/8	17 3/4	13 3/4	31 1/2	20 1/16	16 1/16	37
FC&BI	30	30	1 1/8	1/2 X 1/4	20 3/4	26	22 1/8	29 1/8	21 7/8	30 7/8	24 1/4	32	31	4	26 1/16	12 1/2	15 1/2	1/16	14 1/8	58	53 3/8	20 1/4	15	35 1/4	22 1/2	17 3/4	40 1/4

NOTE: All dimensions subject to change without notice. Where exact dimensions are required write for certified drawings.

ROUGHING-IN DIMENSIONS — ARRANGEMENT 3 — SIZES 6-30

DOUBLE WIDTH DOUBLE INLET —— TOP HORIZONTAL DISCHARGE

FIGURE RI-17

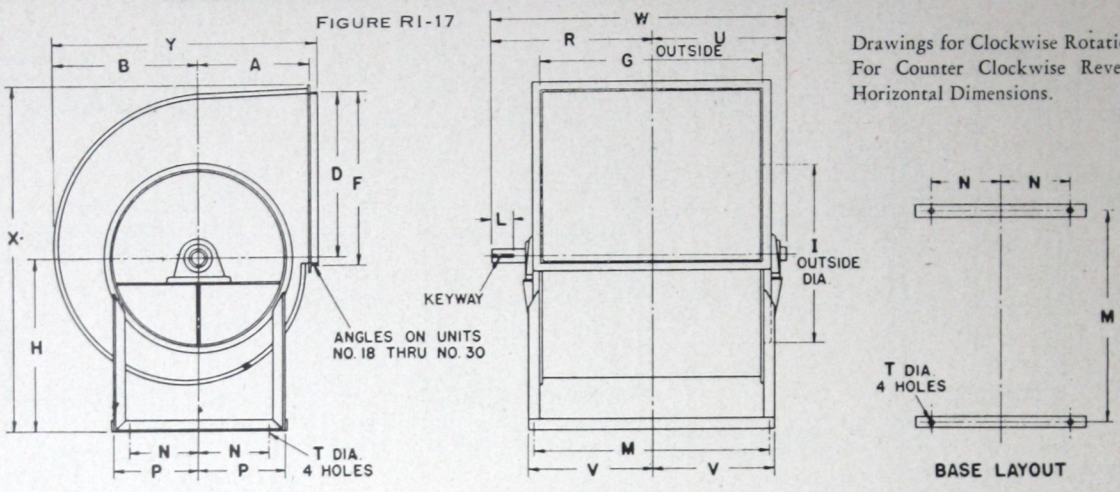

Drawings for Clockwise Rotation. For Counter Clockwise Reverse Horizontal Dimensions.

TABLE RI-17

FAN TYPE	FAN SIZE	WHEEL DIAM.	SHAFT DIAM.	KEY WAY	A	B	D	F	G	H	I	L	M	N	P	T	V	X	Y	BALL BEARING R	BALL BEARING U	BALL BEARING W	SLEEVE BEARING R	SLEEVE BEARING U	SLEEVE BEARING W
FC ONLY	8	8	5/8	NONE	6 1/4	7 1/4	8 1/16	8 5/8	10 13/16	9	8 1/2		12 1/16	3	4	1/2	6 1/2	17 7/16	13 1/2	9 5/8	7 1/2	17 1/8	10 3/8	7 7/8	18 1/4
FC ONLY	10	10	1 3/16	1/4 X 1/8	7 1/2	8 7/8	9 7/8	10 5/8	13 5/8	11	10 1/2	1 1/2	14 7/16	3 3/4	5	1/2	7 13/16	21 1/4	16 3/16	11 11/16	8 13/16	20 5/8	13	9 7/8	22 7/8
FC ONLY	12	12	1 3/16	1/4 X 1/8	8 13/16	10 3/4	11 7/8	12 5/8	16 1/8	13	12 1/2	1 1/2	17 13/16	4 1/4	5 3/4	1/2	9 1/2	25 3/8	19 9/16	13 5/8	10 1/4	23 7/8	14 9/16	11 1/16	25 1/2
FC & BI	15	15	1 7/16	1/4 X 1/8	10 3/16	13 1/4	14 13/16	15 5/8	20 3/8	16	16	2 1/2	21 13/16	6 1/2	7 3/4	1/2	11 5/8	31 9/16	23 7/8	16 1/16	12 3/4	28 7/8	17 3/8	13 7/8	31 3/4
FC & BI	18	18	1 7/16	3/16 X 1/16	12 7/8	15 13/16	17 13/16	18 7/8	24 5/8	19	19	2 1/2	26 3/16	7 1/2	9 1/4	5/16	13 7/8	37 11/16	29 5/16	19 1/2	14 7/8	34 3/8	23 1/16	19 5/16	42 1/4
FC & BI	21	21	1 7/16	3/16 X 1/16	14 7/8	18 1/16	20 7/8	21 7/8	28 3/4	22	22	2 1/2	30 5/16	8 7/8	10 7/8	5/16	15 7/8	43 3/4	34 1/16	21 13/16	16 13/16	38 5/8	25 1/16	21 1/4	46 3/8
FC & BI	24	24	1 11/16	3/16 X 1/16	16 3/8	20 13/16	23 5/16	24 7/8	35 3/8	26	25	3 1/2	37 1/2	10 1/2	12 1/2	5/16	19 3/4	50 3/4	38 1/16	25 13/16	20 5/16	46 1/4	28 11/16	23 13/16	52 1/2
FC & BI	27	27	1 13/16	3/16 X 1/16	18 3/16	23 1/2	26 13/16	27 7/8	39 3/4	29	28	3 1/2	41 7/8	11 1/2	14	5/16	21 13/16	56 13/16	43	29	22 3/4	51 3/4	31	25 1/2	56 1/2
FC & BI	30	30	1 13/16*	1/2 X 1/4	20 3/4	26	29 13/16	30 7/8	44	32	31	4	46 1/8	12 1/2	15 1/2	5/16	24 1/16	62 13/16	47 3/8	31 7/8	24 7/8	56 3/4	33 1/16	27 5/8	60 3/4

DOUBLE WIDTH DOUBLE INLET —— UP-BLAST DISCHARGE

FIGURE RI-18

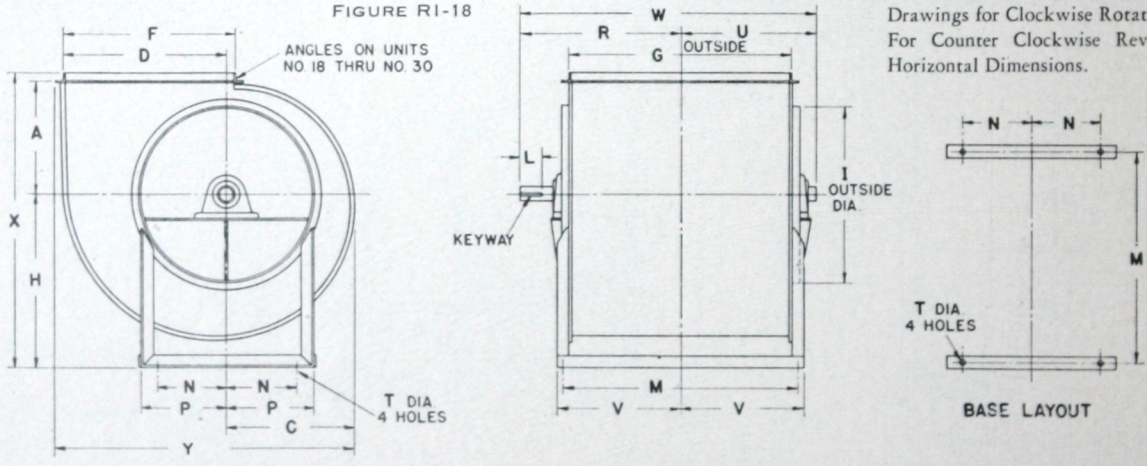

Drawings for Clockwise Rotation. For Counter Clockwise Reverse Horizontal Dimensions.

TABLE RI-18

FAN TYPE	FAN SIZE	WHEEL DIAM.	SHAFT DIAM.	KEY WAY	A	C	D	F	G	H	I	L	M	N	P	T	V	X	Y	BALL BEARING R	BALL BEARING U	BALL BEARING W	SLEEVE BEARING R	SLEEVE BEARING U	SLEEVE BEARING W
FC ONLY	8	8	5/8	NONE	6 1/4	6 3/8	8 1/16	8 5/8	10 13/16	9	8 1/2		12 1/16	3	4	1/2	6 1/2	15 1/4	14 1/2	9 5/8	7 1/2	17 1/8	10 3/8	7 7/8	18 1/4
FC ONLY	10	10	1 3/16	1/4 X 1/8	7 1/2	7 7/8	9 7/8	10 5/8	13 5/8	11	10 1/2	1 1/2	14 7/8	3 3/4	5	1/2	7 13/16	18 1/2	18 1/8	11 11/16	8 13/16	20 5/8	13	9 7/8	22 7/8
FC ONLY	12	12	1 3/16	1/4 X 1/8	8 13/16	9 7/16	11 7/8	12 5/8	16 1/8	13	12 1/2	1 1/2	17 13/16	4 1/4	5 3/4	1/2	9 1/2	21 13/16	21 13/16	13 5/8	10 1/4	23 7/8	14 9/16	11 1/16	25 1/2
FC & BI	15	15	1 7/16	1/4 X 1/8	10 3/16	11 5/16	14 13/16	15 5/8	20 3/8	16	16	2 1/2	21 13/16	6 1/2	7 3/4	1/2	11 5/8	26 9/16	26 13/16	16 1/16	12 3/4	28 7/8	17 3/8	13 7/8	31 3/4
FC & BI	18	18	1 7/16	3/16 X 1/16	12 7/8	13 7/8	17 13/16	18 7/8	24 5/8	19	19	2 1/2	26 5/16	7 1/2	9 3/4	5/16	13 7/8	32 3/4	32 5/16	19 1/2	14 7/8	34 3/8	23 1/16	19 5/16	42 1/4
FC & BI	21	21	1 7/16	3/16 X 1/16	14 7/8	16 1/16	20 7/8	21 7/8	28 3/4	22	22	2 1/2	30 5/16	8 7/8	10 7/8	5/16	15 7/8	37 3/4	37 5/16	21 13/16	16 13/16	38 5/8	25 1/16	21 1/4	46 3/8
FC & BI	24	24	1 11/16	3/16 X 1/16	16 3/8	18 3/8	23 5/16	24 7/8	35 3/8	26	25	3 1/2	37 1/2	10 1/2	12 1/2	5/16	19 3/4	43 1/2	43 1/16	25 13/16	20 5/16	46 1/4	28 11/16	23 13/16	52 1/2
FC & BI	27	27	1 13/16	3/16 X 1/16	18 3/16	20 1/16	26 13/16	27 7/8	39 3/4	29	28	3 1/2	41 7/8	11 1/2	14	5/16	21 13/16	48 1/2	48 5/16	29	22 3/4	51 3/4	31	25 1/2	56 1/2
FC & BI	30	30	1 13/16*	1/2 X 1/4	20 3/4	22 13/16	29 13/16	30 7/8	44	32	31	4	46 1/8	12 1/2	15 1/2	5/16	24 1/16	53 7/8	93 5/16	31 7/8	24 7/8	56 3/4	33 1/16	27 5/8	60 3/4

* *Diameter at bearing and for sheave bore.*

NOTE All dimensions subject to change without notice. Where exact dimensions are required write for certified drawings.

ROUGHING-IN DIMENSIONS — ARRANGEMENT 3 — SIZES 6-30

DOUBLE WIDTH DOUBLE INLET —— BOTTOM HORIZONTAL DISCHARGE

FIGURE RI-19

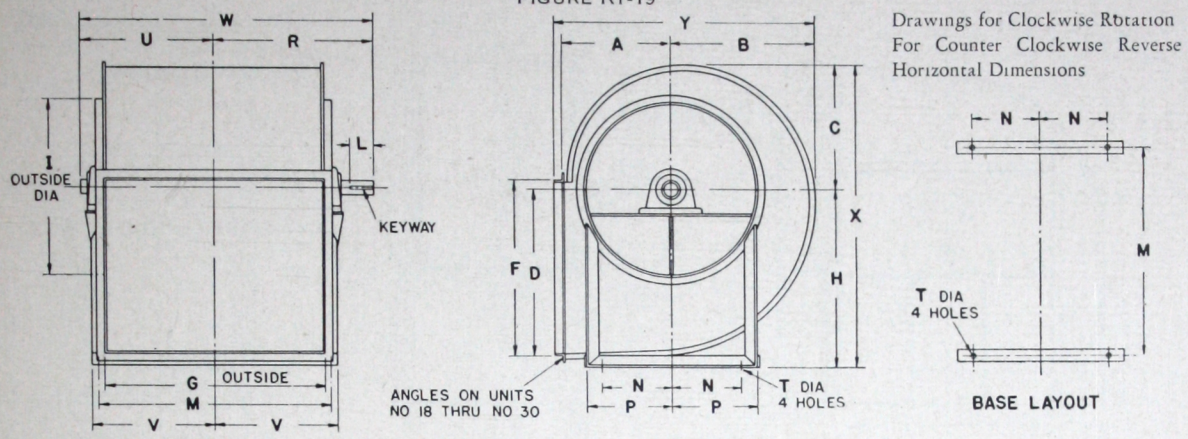

TABLE RI-19

FAN TYPE	FAN SIZE	WHEEL DIAM.	SHAFT DIAM.	KEY WAY	A	B	C	D	F	G	H	I	L	M	N	P	T	V	X	Y	BALL BEARING R	BALL BEARING U	BALL BEARING W	OIL RING SLEEVE BEARING R	OIL RING SLEEVE BEARING U	OIL RING SLEEVE BEARING W
FC ONLY	8	8	5/8	NONE	6 1/4	7 1/4	6 3/8	8 1/16	8 3/8	10 13/16	9	8 1/2		12 1/16	3	4	1/2	6 1/2	15 3/8	13 1/2	9 3/8	7 1/2	17 1/8	10 3/8	7 3/8	18 1/4
FC ONLY	10	10	1/8	1/4 X 1/8	7 1/2	8 7/8	7 3/8	9 7/8	10 3/8	13 3/8	11	10 1/2	1 1/2	14 7/8	3 3/4	5	1/2	7 13/16	18 7/8	16 3/8	11 13/16	8 1/8	20 5/8	13	9 7/8	22 7/8
FC ONLY	12	12	1/8	1/4 X 1/8	8 1/8	10 1/4	9 1/16	11 7/8	12 5/8	16 5/8	13	12 1/2	1 1/2	17 1/8	4 1/4	5 3/4	1/2	9 1/2	22 7/8	19 7/8	13 5/8	10 1/4	23 7/8	14 5/8	11 1/16	25 1/2
FC & BI	15	15	1 3/16	1/4 X 1/8	10 5/8	13 1/4	11 5/8	14 13/16	15 5/8	20 3/8	16	16	2 1/2	21 1/8	6 1/2	7 3/4	1/2	11 5/8	27 5/8	23 7/8	16 1/8	12 3/4	28 7/8	17 7/8	13 7/8	31 3/4
FC & BI	18	18	1 7/16	3/8 X 1/8	12 7/8	15 1/2	13 7/8	17 13/16	18 7/8	24 5/8	19	19	2 1/2	26 1/8	7 1/2	9 1/4	1/8	13 7/8	32 7/8	29 1/8	19 1/2	14 7/8	34 3/8	23 1/8	19 1/16	42 1/4
FC & BI	21	21	1 7/16	3/8 X 1/8	14 7/8	18 1/8	16 1/8	20 7/8	21 7/8	28 3/4	22	22	2 1/2	30 1/8	8 7/8	10 7/8	1/8	15 7/8	38 1/8	34 1/16	21 11/16	16 13/16	38 3/8	25 1/8	21 1/4	46 3/8
FC & BI	24	24	1 11/16	3/4 X 1/8	16 3/8	20 1/8	18 3/8	23 5/8	24 7/8	35 3/8	26	25	3 1/2	37 1/2	10 1/2	12 1/2	1/8	19 3/4	44 3/8	38 1/16	25 1/8	20 1/16	46 1/4	28 11/16	23 1/16	52 1/2
FC & BI	27	27	1 15/16	3/8 X 1/16	18 3/8	23 1/2	20 11/16	26 13/16	27 7/8	39 3/4	29	28	3 1/2	41 7/8	11 1/2	14	1/8	21 13/16	49 11/16	43	29	22 3/4	51 3/4	31	25 1/16	56 1/2
FC & BI	30	30	1 15/16 *	1/2 X 1/4	20 3/4	26	22 13/16	29 13/16	30 7/8	44	32	31	4	46 1/8	12 1/2	15 1/2	1/8	24 1/16	54 13/16	47 3/8	31 7/8	24 3/8	56 3/4	33 1/8	27 5/8	60 3/4

DOUBLE WIDTH DOUBLE INLET —— DOWN-BLAST DISCHARGE

FIGURE RI-20

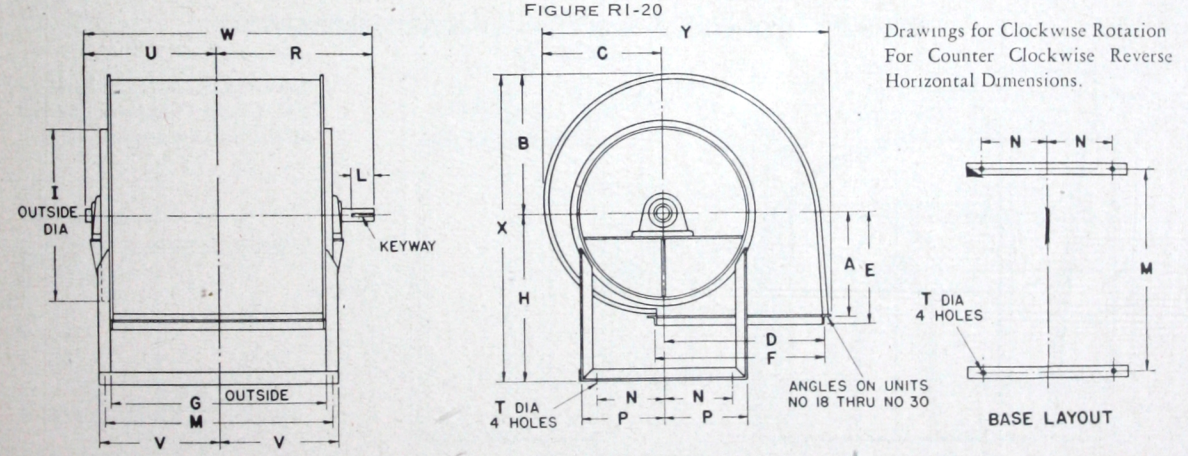

TABLE RI-20

FAN TYPE	FAN SIZE	WHEEL DIAM	SHAFT DIAM.	KEY WAY	A	B	C	D	E	F	G	H	I	L	M	N	P	T	V	X	Y	BALL BEARING R	BALL BEARING U	BALL BEARING W	OIL RING SLEEVE BEARING R	OIL RING SLEEVE BEARING U	OIL RING SLEEVE BEARING W
FCOnly	8	8	5/8	NONE	6 1/4	7 1/4	6 3/8	8 1/16	6 1/4	8 3/8	10 13/16	9	8 1/2		12 1/16	3	4	1/2	6 1/2	16 1/4	14 1/2	9 3/8	7 1/2	17 1/8	10 3/8	7 3/8	18 1/4
FCOnly	10	10	1/8	1/4 X 1/8	7 1/2	8 7/8	7 3/8	9 7/8	7 1/2	10 3/8	13 3/8	11	10 1/2	1 1/2	14 7/8	3 3/4	5	1/2	7 13/16	19 7/8	18 1/8	11 13/16	8 1/8	20 5/8	13	9 7/8	22 7/8
FCOnly	12	12	1/8	1/4 X 1/8	8 1/8	10 3/4	9 1/16	11 7/8	8 1/2	12 5/8	16 5/8	13	12 1/2	1 1/2	17 1/8	4 1/4	5 3/4	1/2	9 1/2	23 1/4	21 1/8	13 3/4	10 1/4	23 7/8	14 5/8	11 1/16	25 1/2
FC&BI	15	15	1 3/16	1/4 X 1/8	10 5/8	13 1/4	11 5/8	14 13/16	10 3/8	15 3/8	20 3/8	16	16	2 1/2	21 1/8	6 1/2	7 3/4	1/2	11 5/8	29 1/4	26 1/8	16 1/8	12 3/4	28 7/8	17 7/8	13 7/8	31 3/4
FC&BI	18	18	1 7/16	3/8 X 1/8	12 7/8	15 1/2	13 7/8	17 13/16	13 3/4	18 7/8	24 5/8	19	19	2 1/2	26 1/8	7 1/2	9 1/4	1/8	13 7/8	34 1/16	32 1/16	19 1/2	14 7/8	34 3/8	23 1/16	19 1/16	42 1/4
FC&BI	21	21	1 7/16	3/8 X 1/8	14 7/8	18 1/8	16 1/2	20 7/8	15 1/4	21 7/8	28 3/4	22	22	2 1/2	30 1/8	8 7/8	10 7/8	1/8	15 7/8	40 1/16	37 3/4	21 11/16	16 13/16	38 3/8	25 1/8	21 1/4	46 3/8
FC&BI	24	24	1 11/16	3/8 X 1/8	16 3/8	20 1/8	18 3/8	23 5/8	17 1/2	24 7/8	35 3/8	26	25	3 1/2	37 1/2	10 1/2	12 1/2	1/8	19 3/4	46 1/16	43 1/16	25 13/16	20 1/16	46 1/4	28 11/16	23 1/16	52 1/2
FC&BI	27	27	1 15/16	3/8 X 1/8	18 3/4	23 1/2	20 11/16	26 13/16	19 1/2	27 7/8	39 3/4	29	28	3 1/2	41 7/8	11 1/2	14	1/8	21 13/16	52 1/2	48 3/4	29	22 3/4	51 3/4	31	25 1/2	56 1/2
FC&BI	30	30	1 15/16 *	1/2 X 1/4	20 3/4	26	22 13/16	29 13/16	21 7/8	30 7/8	44	32	31	4	46 1/8	12 1/2	15 1/2	1/8	24 1/16	58	53 3/8	31 7/8	24 3/8	56 3/4	33 1/8	27 5/8	60 3/4

* *Diameter at bearing and for sheave bore*

NOTE: All dimensions subject to change without notice Where exact dimensions are required write for certified drawings

ROUGHING-IN DIMENSIONS — ARRANGEMENT 3 — SIZES 33-89

SINGLE WIDTH SINGLE INLET —— TOP HORIZONTAL DISCHARGE

FIGURE RI-21

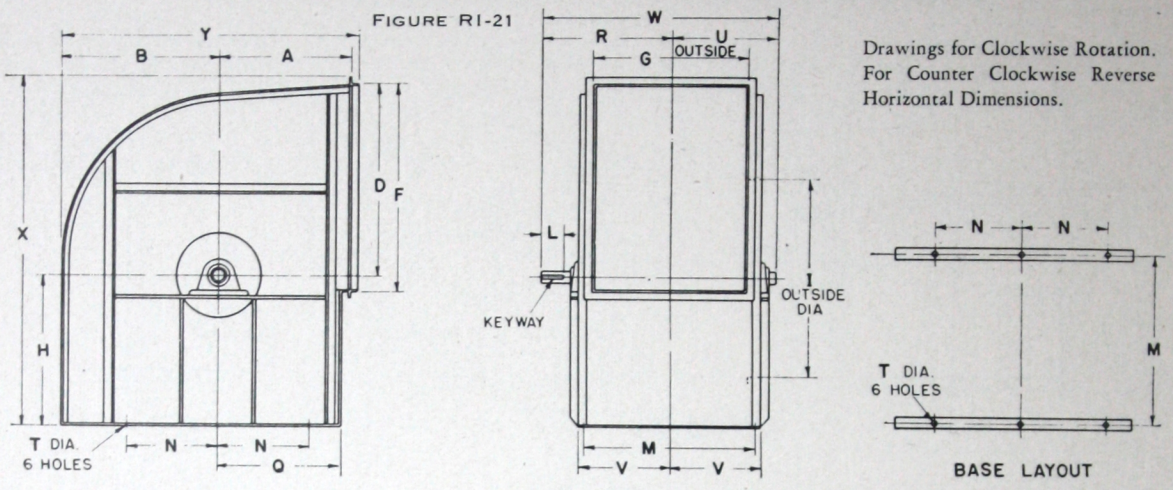

Drawings for Clockwise Rotation. For Counter Clockwise Reverse Horizontal Dimensions.

BASE LAYOUT

TABLE RI-21

FAN TYPE	FAN SIZE	WHEEL DIAM.	SHAFT DIAM.	KEY WAY	A	B	D	F	G	H	I	L	M	N	Q	T	V	X	Y	BALL BEARING R	BALL BEARING U	BALL BEARING W	OIL RING SLEEVE BEARING R	OIL RING SLEEVE BEARING U	OIL RING SLEEVE BEARING W
FC & BI	33	33	1 1/8	1/2 X 1/4	23	27 7/8	32 1/4	33 3/8	27	26 1/4	34	4	28 1/8	17	21	1/16	15 1/16	60 1/16	52	22 1/2	16 1/2	39	25 1/8	19 3/8	44 1/2
FC & BI	36	36	1 1/8	1/2 X 1/4	25	30 7/8	35 5/8	36 3/4	29	28 1/4	37	4	31 1/8	18	22 1/8	1/16	16 1/16	65	56 1/16	24	17 1/2	41 1/2	26 5/8	20 3/8	47
FC & BI	40	40 1/4	2 3/16	1/2 X 1/4	28	34 1/8	39 3/4	40 3/4	32 3/8	32 1/4	41 1/4	5	34 3/8	21	25 3/4	3/4	18 1/16	73 1/8	63 1/4	26 1/16	19 1/8	46	29 1/16	23 1/16	52 1/2
FC & BI	44	44 1/2	2 3/16	1/2 X 1/4	31	37 1/8	43 7/8	45	35 3/4	35 1/2	45 1/2	5	37 3/4	23	28 1/16	3/4	19 3/8	80 1/2	69 1/8	28 7/8	21 3/8	50 1/4	32	24 3/4	56 3/4
FC & BI	49	49	2 7/16	5/8 X 5/16	34 1/8	41 1/2	48 3/8	49 1/2	39 1/4	39	50	5	42 1/4	25	31 1/16	7/8	22 1/8	88 1/2	76 3/4	31 5/8	23 3/8	55	35 3/8	27 3/8	63
FC & BI	54	54	2 1/2	5/8 X 5/16	37	45 3/4	53 1/4	54 1/2	43 1/4	43	55	6	46 3/4	27	34 1/2	7/8	24 5/8	97 3/8	83 7/8	34 5/8	25 3/8	60	39 3/8	30 1/8	69 1/2
FC & BI	60	60	2 1/2	3/4 X 3/8	41 1/4	50 7/8	59 1/4	60 1/2	48	47 1/2	61	6	51 1/2	30	38 1/16	7/8	27	108 1/8	93 1/2	38 1/4	28 1/4	66 1/2	42 1/2	32 1/2	75
FC & BI	66	66	3 3/16	3/4 X 3/8	45 1/8	55 1/2	65 1/8	66 1/2	52 3/4	52	67	7	56 1/4	33	41 1/2	7/8	29 3/8	118 1/2	102 1/16	41 7/8	31 1/8	73	47 1/8	36 3/8	83 1/2

SINGLE WIDTH SINGLE INLET —— UP-BLAST DISCHARGE

FIGURE RI-22

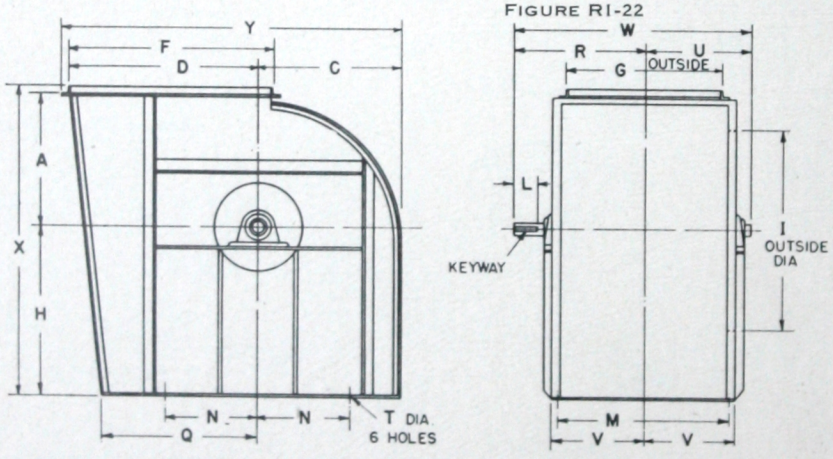

Drawings for Clockwise Rotation. For Counter Clockwise Reverse Horizontal Dimensions.

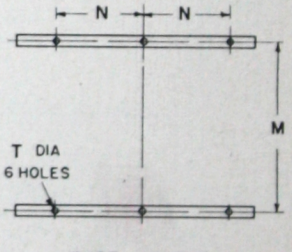

BASE LAYOUT

TABLE RI-22

FAN TYPE	FAN SIZE	WHEEL DIAM.	SHAFT DIAM.	KEY WAY	A	C	D	F	G	H	I	L	M	N	Q	T	V	X	Y	BALL BEARING R	BALL BEARING U	BALL BEARING W	OIL RING SLEEVE BEARING R	OIL RING SLEEVE BEARING U	OIL RING SLEEVE BEARING W
FC & BI	33	33	1 1/8	1/2 X 1/4	23	24 7/16	32 1/4	33 3/8	27	30	34	4	28 1/8	17	29 1/4	1/16	15 1/16	54 1/2	58 1/4	22 1/2	16 1/2	39	25 1/8	19 3/8	44 1/2
FC & BI	36	36	1 1/8	1/2 X 1/4	25	26 1/4	35 5/8	36 3/8	29	32	37	4	31 1/8	18	32 1/16	1/16	16 1/16	58 1/8	63 1/16	24	17 1/2	41 1/2	26 5/8	20 3/8	47
FC & BI	40	40 1/4	2 3/16	1/2 X 1/4	28	29 1/8	39 3/4	40 3/4	32 3/8	36 1/2	41 1/4	5	34 3/8	21	36 1/16	3/4	18 1/16	65 5/8	70 1/8	26 1/16	19 1/8	46	29 1/16	23 1/16	52 1/2
FC & BI	44	44 1/2	2 3/16	1/2 X 1/4	31	33	43 7/8	45	35 3/4	40	45 1/2	5	37 3/4	23	40 1/16	3/4	19 3/8	72 1/8	78	28 7/8	21 3/8	50 1/4	32	24 3/4	56 3/4
FC & BI	49	49	2 7/16	5/8 X 5/16	34 1/8	36 1/16	48 3/8	49 1/2	39 1/4	44	50	5	42 1/4	25	44 1/4	7/8	22 1/8	79 1/4	85 1/16	31 5/8	23 3/8	55	35 3/8	27 3/8	63
FC & BI	54	54	2 1/2	5/8 X 5/16	37	40 1/8	53 1/4	54 1/2	43 1/4	48 3/4	55	6	46 3/4	27	48 3/4	7/8	24 5/8	86 7/8	94 1/2	34 5/8	25 3/8	60	39 3/8	30 1/8	69 1/2
FC & BI	60	60	2 1/2	3/4 X 3/8	41 1/4	44 7/8	59 1/4	60 1/2	48	54	61	6	51 1/2	30	54 3/16	7/8	27	96 3/8	105 1/16	38 1/4	28 1/4	66 1/2	42 1/2	32 1/2	75
FC & BI	66	66	3 3/16	3/4 X 3/8	45 1/8	48 7/16	65 1/8	66 1/2	52 3/4	59	67	7	56 1/4	33	59 1/2	7/8	29 3/8	105 1/2	115 3/16	41 7/8	31 1/8	73	47 1/8	36 3/8	83 1/2

NOTE: All dimensions subject to change without notice. Where exact dimensions are required write for certified drawings.

ROUGHING-IN DIMENSIONS — ARRANGEMENT 3 — SIZES 33-89

SINGLE WIDTH SINGLE INLET — BOTTOM HORIZONTAL DISCHARGE

FIGURE RI-23

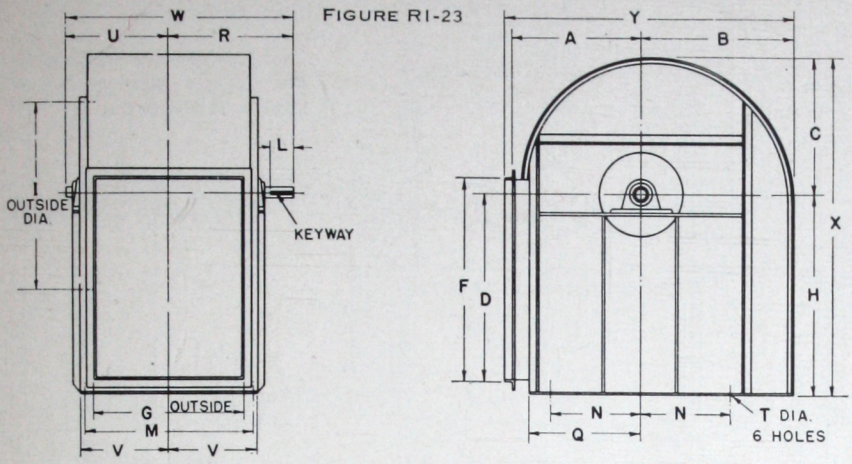

Drawings for Clockwise Rotation. For Counter Clockwise Reverse Horizontal Dimensions.

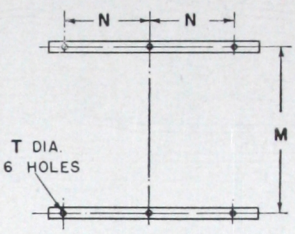

BASE LAYOUT

TABLE RI-23

FAN TYPE	FAN SIZE	WHEEL DIAM.	SHAFT DIAM.	KEY WAY	A	B	C	D	F	G	H	I	L	M	N	Q	T	V	X	Y	BALL BEARING R	BALL BEARING U	BALL BEARING W	OIL RING SLEEVE BEARING R	OIL RING SLEEVE BEARING U	OIL RING SLEEVE BEARING W
FC & BI	33	33	1 13/16	1/2 X 1/4	23	27 7/8	24 7/16	32 11/16	33 3/8	27	34 3/4	34	4	28 1/8	17	19 7/8	9/16	15 1/16	59 3/16	52	22 1/2	16 1/2	39	25 1/8	19 3/8	44 1/2
FC & BI	36	36	1 13/16	1/2 X 1/4	25	30 7/16	26 11/16	35 5/8	36 3/8	29	37 3/4	37	4	31 1/8	18	21 3/4	9/16	16 9/16	64 1/16	56 9/16	24	17 1/2	41 1/2	26 5/8	20 3/8	47
FC & BI	40	40 1/4	2 3/16	1/2 X 1/4	28	34 1/8	29 13/16	39 3/4	40 3/4	32 3/8	42 1/4	41 1/4	5	34 3/8	21	24	3/4	18 3/16	72 3/16	63 1/4	26 3/16	19 11/16	46	29 7/16	23 1/16	52 1/2
FC & BI	44	44 1/2	2 3/16	1/2 X 1/4	31	37 1/16	33	43 7/8	45	35 3/4	46 1/2	45 1/2	5	37 3/4	23	26 1/4	3/4	19 7/8	79 1/2	69 13/16	28 7/8	21 3/8	50 1/4	32	24 3/4	56 3/4
FC & BI	49	49	2 7/16	5/8 X 5/16	34 1/16	41 1/2	36 5/16	48 3/4	49 1/2	39 1/4	51	50	5	42 1/4	25	28 1/2	7/16	22 1/16	87 5/16	76 3/4	31 5/8	23 3/8	55	35 5/8	27 3/8	63
FC & BI	54	54	2 11/16	5/8 X 5/16	37	45 3/4	40 1/8	53 1/4	54 1/2	43 1/4	56 1/4	55	6	46 3/4	27	31	7/8	24 5/8	96 3/16	83 7/8	34 5/8	25 3/8	60	39 3/16	30 1/16	69 1/2
FC & BI	60	60	2 15/16	3/4 X 3/16	41 1/4	50 7/8	44 5/16	59 1/4	60 1/2	48	62 1/4	61	6	51 1/2	30	34 5/16	7/8	27	106 13/16	93 1/2	38 1/4	28 1/4	66 1/4	42 1/2	32 1/2	75
FC & BI	66	66	3 7/16	3/4 X 3/8	45 1/16	55 13/16	48 7/8	65 1/8	66 1/2	52 3/4	68 3/4	67	7	56 1/4	33	37 1/4	7/8	29 3/8	117 1/8	102 5/16	41 7/8	31 1/16	73	47 1/16	36 3/8	83 1/2

SINGLE WIDTH SINGLE INLET — DOWN-BLAST DISCHARGE

FIGURE RI-24

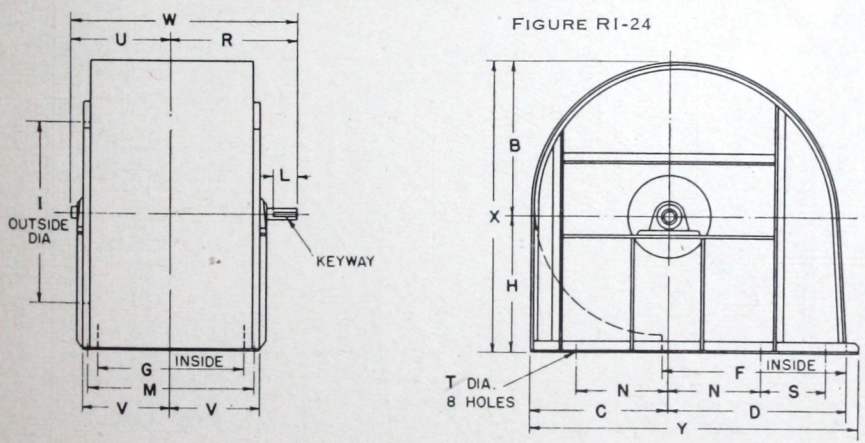

Drawings for Clockwise Rotation. For Counter Clockwise Reverse Horizontal Dimensions.

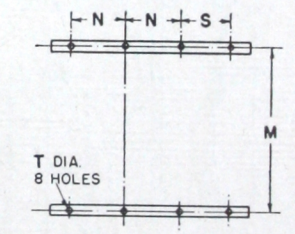

BASE LAYOUT

TABLE RI-24

FAN TYPE	FAN SIZE	WHEEL DIAM.	SHAFT DIAM.	KEY WAY	B	C	D	F	G	H	I	L	M	N	S	T	V	X	Y	BALL BEARING R	BALL BEARING U	BALL BEARING W	OIL RING SLEEVE BEARING R	OIL RING SLEEVE BEARING U	OIL RING SLEEVE BEARING W
FC & BI	33	33	1 13/16	1/2 X 1/4	27 7/8	24 7/16	32 11/16	33 3/8	26 3/4	24 1/2	34	4	30 3/4	17	13	9/16	16 3/8	52 3/4	59 1/2	22 1/2	16 1/2	39	25 1/8	19 3/8	44 1/2
FC & BI	36	36	1 13/16	1/2 X 1/4	30 7/16	26 11/16	35 1/2	36 3/8	28 3/4	26	37	4	32 3/4	18	14	9/16	17 3/8	56 1/16	64 1/16	24	17 1/2	41 1/2	26 5/8	20 3/8	47
FC & BI	40	40 1/4	2 3/16	1/2 X 1/4	34 1/8	29 13/16	39 5/8	40 1/2	32 1/8	28 5/8	41 1/4	5	36 1/8	21	14	3/4	19 1/16	62 3/4	72 1/16	26 3/16	19 11/16	46	29 7/16	23 1/16	52 1/2
FC & BI	44	44 1/2	2 3/16	1/2 X 1/4	37 1/16	33	43 3/4	44 3/4	35 1/2	32	45 1/2	5	39 1/2	23	15	3/4	20 3/4	69 11/16	79 1/4	28 7/8	21 3/8	50 1/4	32	24 3/4	56 3/4
FC & BI	49	49	2 7/16	5/8 X 5/16	41 1/2	36 5/16	48 3/4	49 1/4	39	34 3/4	50	5	43	25	16	7/16	22 1/2	76 1/4	87 1/16	31 5/8	23 3/8	55	35 5/8	27 3/8	63
FC & BI	54	54	2 11/16	5/8 X 5/16	45 3/4	40 1/16	53 1/16	54 1/4	43	37 5/8	55	6	47 1/2	27	18	7/8	25	83 3/8	95 3/4	34 5/8	25 3/8	60	39 3/16	30 1/8	69 1/2
FC & BI	60	60	2 15/16	3/4 X 3/16	50 7/8	44 5/16	59 1/16	60 1/4	47 3/4	42 1/16	61	6	52 1/4	30	22	7/8	27 3/8	93	106 3/16	38 1/4	28 1/4	66 1/4	42 1/2	32 1/2	75
FC & BI	66	66	3 7/16	3/4 X 3/8	55 13/16	48 7/8	65	66 1/4	52 1/2	46	67	7	57	33	27	7/8	29 3/4	101 1/2	116 3/8	41 7/8	31 1/16	73	47 1/16	36 3/8	83 1/2

NOTE: All dimensions subject to change without notice. Where exact dimensions are required, write for certified drawings.

ROUGHING-IN DIMENSIONS — ARRANGEMENT 3 — SIZES 33-89

DOUBLE WIDTH DOUBLE INLET — TOP HORIZONTAL DISCHARGE

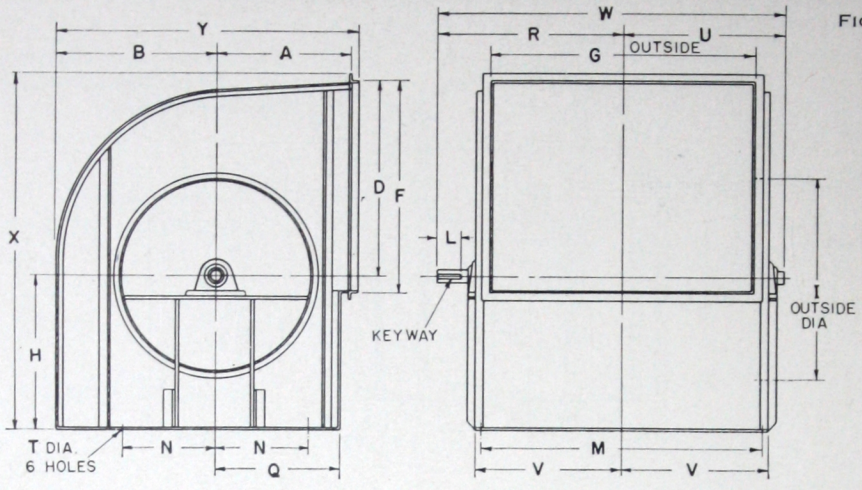

FIGURE RI-25

Drawings for Clockwise Rotation. For Counter Clockwise Reverse Horizontal Dimensions.

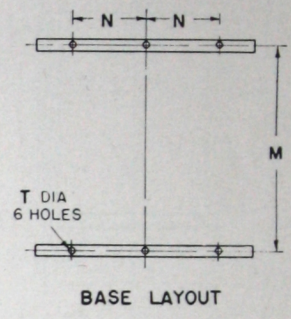

BASE LAYOUT

TABLE RI-25

FAN TYPE	FAN SIZE	WHEEL DIAM.	SHAFT DIAM.*	KEY WAY	A	B	D	F	G	H	I	L	M	N	Q	T	V	X	Y	BALL BEARING R	BALL BEARING U	BALL BEARING W	OIL RING SLEEVE BEARING R	OIL RING SLEEVE BEARING U	OIL RING SLEEVE BEARING W
FC & BI	33	33	1 3/16	1/2 X 1/4	23	27 7/8	32 11/16	33 3/8	48 3/8	26 1/4	34	4	49 1/2	17	21	9/16	25 3/4	60 1/16	52	35 13/16	27 7/16	63	38 7/16	30 1/16	68 1/2
FC & BI	36	36	1 3/16	1/2 X 1/4	25	30 7/16	35 5/8	36 3/8	52 3/4	28 1/4	37	4	54 7/8	18	22 13/16	9/16	28 7/16	65	56 9/16	39 1/8	29 3/8	68 1/2	41 3/4	32 1/4	74
FC & BI	40	40 1/4	2 1/16	1/2 X 1/4	28	34 1/8	39 3/4	40 3/4	59	32 1/4	41 1/4	5	61	21	25 3/4	3/4	31 1/2	73 1/8	63 1/4	43	33	76	46 1/8	36 3/8	82 1/2
FC & BI	44	44 1/2	2 3/16	1/2 X 1/4	31	37 11/16	43 7/8	45	65	35 1/2	45 1/2	5	67	23	28 9/16	3/4	34 1/2	80 1/2	69 13/16	47	36	83	50 1/8	39 3/8	89 1/2
FC & BI	49	49	2 1/16	5/8 X 5/16	34 1/8	41 1/2	48 3/8	49 1/2	71 3/4	39	50	5	74 3/4	25	31 1/16	7/8	38 3/8	88 1/2	76 3/4	51 3/8	39 5/8	91	55 3/8	43 5/8	99
FC & BI	54	54	2 1/16	5/8 X 5/16	37	45 3/4	53 1/4	54 1/2	79	43	55	6	82 1/2	27	34 1/2	7/8	42 1/2	97 3/8	83 7/8	55 1/4	43 1/4	99	60 1/2	48	108 1/2
FC & BI	60	60	2 1/16	3/4 X 3/8	41 1/4	50 7/8	59 1/4	60 1/2	87 1/2	47 1/2	61	6	91	30	38 9/16	7/8	46 3/4	108 1/8	93 1/2	61	48	109	65 1/4	52 1/4	117 1/2
FC & BI	66	66	3 7/16	3/4 X 3/8	45 1/8	55 13/16	65 1/8	66 1/2	96 1/8	52	67	7	99 5/8	33	41 13/16	7/8	51 1/16	118 1/2	102 9/16	66 9/16	52 13/16	119	71 7/16	58 1/16	129 1/2

DOUBLE WIDTH DOUBLE INLET — UP-BLAST DISCHARGE

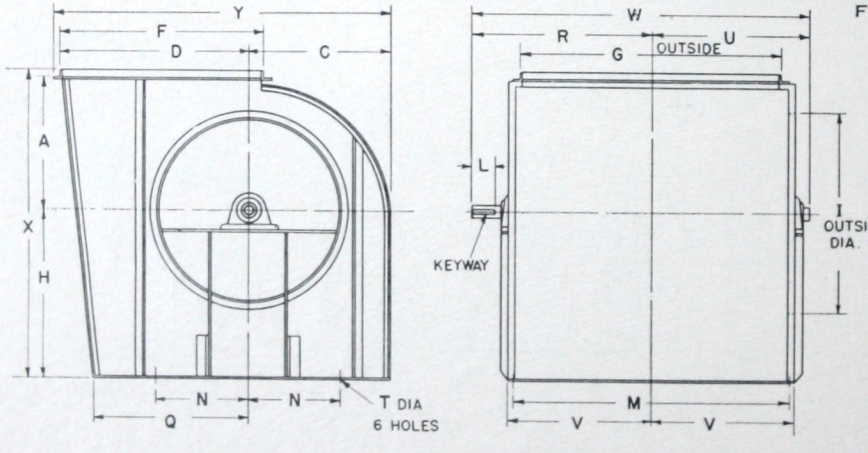

FIGURE RI-26

Drawings for Clockwise Rotation. For Counter Clockwise Reverse Horizontal Dimensions.

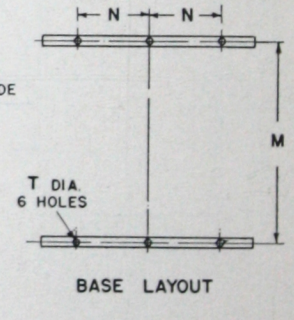

BASE LAYOUT

TABLE RI-26

FAN TYPE	FAN SIZE	WHEEL DIAM.	SHAFT DIAM.*	KEY WAY	A	C	D	F	G	H	I	L	M	N	Q	T	V	X	Y	BALL BEARING R	BALL BEARING U	BALL BEARING W	OIL RING SLEEVE BEARING R	OIL RING SLEEVE BEARING U	OIL RING SLEEVE BEARING W
FC & BI	33	33	1 3/16	1/2 X 1/4	23	24 7/16	32 11/16	33 3/8	48 3/8	30	34	4	49 1/2	17	29 1/16	9/16	25 3/4	54 1/8	58 1/4	35 13/16	27 7/16	63	38 7/16	30 1/16	68 1/2
FC & BI	36	36	1 3/16	1/2 X 1/4	25	26 11/16	35 5/8	36 3/8	52 3/4	32	37	4	54 7/8	18	32 9/16	9/16	28 7/16	58 1/8	63 7/16	39 1/8	29 3/8	68 1/2	41 3/4	32 1/4	74
FC & BI	40	40 1/4	2 1/16	1/2 X 1/4	28	29 1/8	39 3/4	40 3/4	59	36 1/2	41 1/4	5	61	21	36 9/16	3/4	31 1/2	65 5/8	70 1/8	43	33	76	46 1/8	36 3/8	82 1/2
FC & BI	44	44 1/2	2 3/16	1/2 X 1/4	31	33	43 7/8	45	65	40	45 1/2	5	67	23	40 9/16	3/4	34 1/2	72 1/8	78	47	36	83	50 1/8	39 3/8	89 1/2
FC & BI	49	49	2 1/16	5/8 X 5/16	34 1/8	36 5/16	48 3/8	49 1/2	71 3/4	44	50	5	74 3/4	25	44 1/4	7/8	38 3/8	79 1/4	85 13/16	51 3/8	39 5/8	91	55 3/8	43 5/8	99
FC & BI	54	54	2 1/16	5/8 X 5/16	37	40 1/8	53 1/4	54 1/2	79	48 3/4	55	6	82 1/2	27	48 3/4	7/8	42 1/2	86 7/8	94 1/2	55 1/4	43 1/4	99	60 1/2	48	108 1/2
FC & BI	60	60	2 1/16	3/4 X 3/8	41 1/2	44 9/16	59 1/4	60 1/2	87 1/2	54	61	6	91	30	54 3/8	7/8	46 3/4	96 5/8	105 1/16	61	48	109	65 1/4	52 1/4	117 1/2
FC & BI	66	66	3 7/16	3/4 X 3/8	45 1/8	48 7/8	65 1/8	66 1/2	96 1/8	59	67	7	99 5/8	33	59 1/2	7/8	51 1/16	105 1/2	115 3/8	66 9/16	52 13/16	119	71 7/16	58 1/16	129 1/2

* *Diameter at bearing and for sheave bore.*

NOTE: All dimensions subject to change without notice. Where exact dimensions are required write for certified drawings.

ROUGHING-IN DIMENSIONS — ARRANGEMENT 3 — SIZES 33-89

DOUBLE WIDTH DOUBLE INLET — BOTTOM HORIZONTAL DISCHARGE

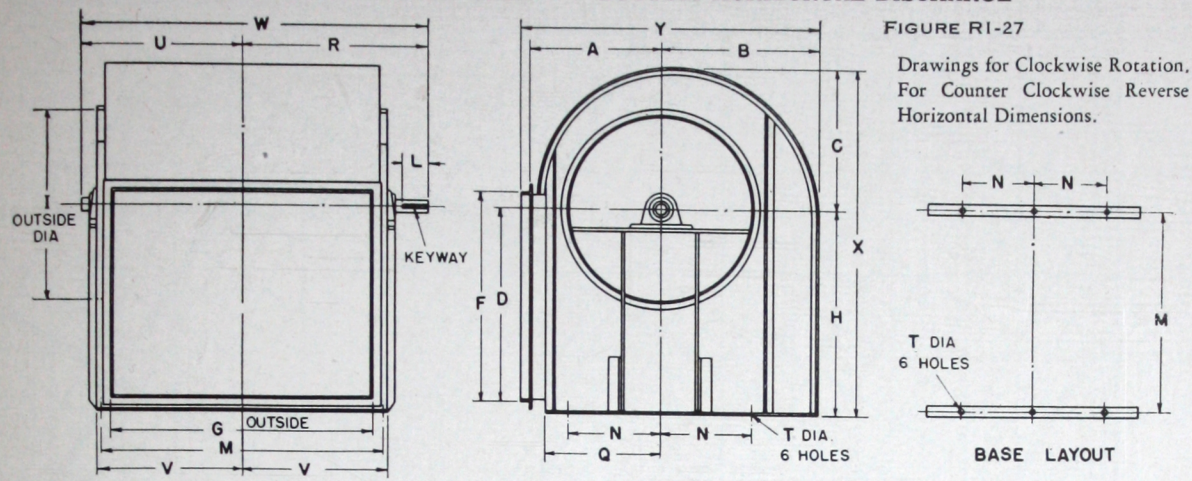

FIGURE RI-27

Drawings for Clockwise Rotation. For Counter Clockwise Reverse Horizontal Dimensions.

TABLE RI-27

FAN TYPE	FAN SIZE	WHEEL DIAM.	SHAFT DIAM.*	KEY WAY	A	B	C	D	F	G	H	I	L	M	N	Q	T	V	X	Y	BALL BEARING R	BALL BEARING U	BALL BEARING W	OIL RING SLEEVE BEARING R	OIL RING SLEEVE BEARING U	OIL RING SLEEVE BEARING W
FC & BI	33	33	1 13/16	1/2 X 1/4	23	27 7/8	24 7/16	32 11/16	33 3/8	48 3/8	34 3/4	34	4	49 1/2	17	19 7/8	3/16	25 3/4	59 3/16	52	35 13/16	27 3/16	63	38 7/16	30 1/16	68 1/2
FC & BI	36	36	1 13/16	1/2 X 1/4	25	30 7/16	26 11/16	35 5/8	36 3/8	52 3/4	37 3/4	37	4	54 7/8	18	21 3/4	1/8	28 7/16	64 7/16	56 9/16	39 1/8	29 3/8	68 1/2	41 3/4	32 1/4	74
FC & BI	40	40 1/4	2 3/16	1/2 X 1/4	28	34 1/8	29 13/16	39 3/4	40 3/4	59	42 1/4	41 1/4	5	61	21	24	3/4	31 1/2	72 13/16	63 1/4	43	33	76	46 1/8	36 3/8	82 1/2
FC & BI	44	44 1/2	2 7/16	1/2 X 1/4	31	37 11/16	33	43 7/8	45	65	46 1/2	45 1/2	5	67	23	26 1/4	3/4	34 1/2	79 1/2	69 13/16	47	36	83	50 1/8	39 3/8	89 1/2
FC & BI	49	49	2 7/16	5/8 X 5/16	34 1/8	41 1/2	36 5/16	48 3/4	49 1/2	71 3/4	51	50	5	74 3/4	25	28 1/2	7/8	38 3/8	87 5/16	76 3/4	51 3/8	39 5/8	91	55 3/8	43 5/8	99
FC & BI	54	54	2 15/16	5/8 X 5/16	37	45 3/4	40 1/8	53 1/4	54 1/2	79	56 1/4	55	6	82 1/2	27	31	7/8	42 1/2	96 3/8	83 7/8	55 1/4	43 1/4	99	60 1/2	48	108 1/2
FC & BI	60	60	2 15/16	3/4 X 3/8	41 1/4	50 7/8	44 5/16	59 1/4	60 1/2	87 1/2	62 1/4	61	6	91	30	34 5/8	7/8	46 3/4	106 13/16	93 1/2	61	48	109	65 1/4	52 1/4	117 1/2
FC & BI	66	66	3 7/16	3/4 X 3/8	45 1/8	55 13/16	48 7/8	65 1/8	66 1/2	96 1/8	68 1/4	67	7	99 5/8	33	37 1/4	7/8	51 1/16	117 1/8	102 5/16	66 3/16	52 13/16	119	71 7/16	58 1/16	129 1/2

DOUBLE WIDTH DOUBLE INLET — DOWN-BLAST DISCHARGE

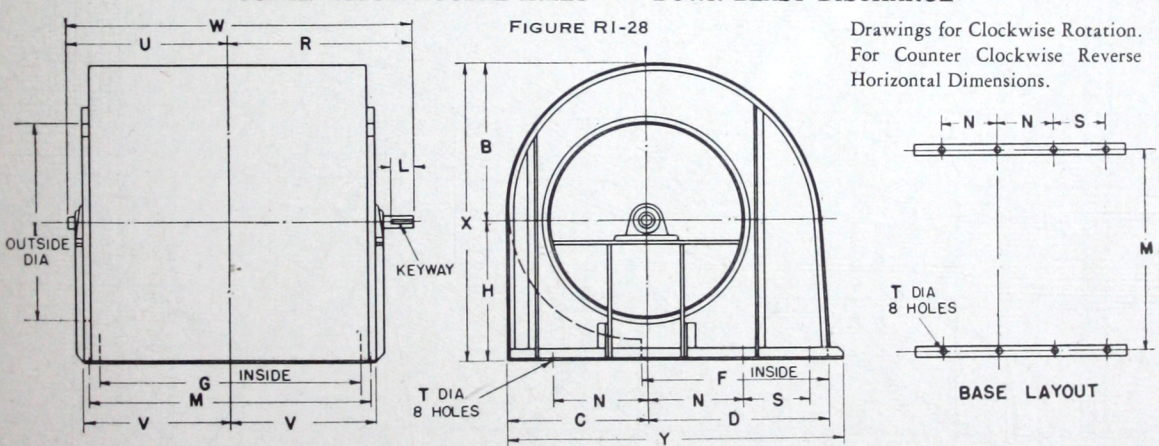

FIGURE RI-28

Drawings for Clockwise Rotation. For Counter Clockwise Reverse Horizontal Dimensions.

TABLE RI-28

FAN TYPE	FAN SIZE	WHEEL DIAM.	SHAFT DIAM.*	KEY WAY	B	C	D	F	G	H	I	L	M	N	S	T	V	X	Y	BALL BEARING R	BALL BEARING U	BALL BEARING W	OIL RING SLEEVE BEARING R	OIL RING SLEEVE BEARING U	OIL RING SLEEVE BEARING W
FC & BI	33	33	1 13/16	1/2 X 1/4	27 7/8	24 7/16	32 9/16	33 3/16	48 1/8	24 1/2	34	4	52 1/8	17	13	9/16	27 1/16	52 3/8	59 1/2	35 13/16	27 3/16	63	38 7/16	30 1/16	68 1/2
FC & BI	36	36	1 13/16	1/2 X 1/4	30 7/16	26 11/16	35 1/2	36 3/16	52 1/2	26	37	4	56 1/2	18	14	9/16	29 1/4	56 7/16	64 1/16	39 1/8	29 3/8	68 1/2	41 3/4	32 1/4	74
FC & BI	40	40 1/4	2 3/16	1/2 X 1/4	34 1/8	29 13/16	39 5/8	40 1/2	58 3/4	28 5/8	41 1/4	5	62 3/4	21	14	3/4	32 3/8	62 3/4	72 1/16	43	33	76	46 1/8	36 3/8	82 1/2
FC & BI	44	44 1/4	2 3/16	1/2 X 1/4	37 11/16	33	43 3/4	44 3/4	64 3/4	32	45 1/2	5	68 3/4	23	15	3/4	35 3/8	69 11/16	79 1/4	47	36	83	50 1/8	39 3/8	89 1/2
FC & BI	49	49	2 7/16	5/8 X 5/16	41 1/2	36 5/16	48 1/4	49 1/4	71 1/2	34 3/4	50	5	75 1/2	25	16	7/8	38 3/4	76 1/4	87 1/16	51 3/8	39 5/8	91	55 3/8	43 5/8	99
FC & BI	54	54	2 15/16	5/8 X 5/16	45 3/4	40 1/8	53 1/8	54 1/4	78 3/4	37 5/8	55	6	83 1/4	27	18	7/8	42 7/8	83 3/8	95 3/4	55 3/4	43 1/4	99	60 1/2	48	108 1/2
FC & BI	60	60	2 15/16	3/4 X 3/8	50 7/8	44 5/16	59 1/8	60 1/4	87 1/4	42 1/8	61	6	91 3/4	30	22	7/8	47 1/8	93	106 1/2	61	48	109	65 1/4	52 1/4	117 1/2
FC & BI	66	66	3 7/16	3/4 X 3/8	55 13/16	48 7/8	65	66 1/4	95 7/8	46	67	7	100 3/8	33	27	7/8	51 1/16	101 13/16	116 3/8	66 3/16	52 13/16	119	71 7/16	58 1/16	129 1/2

* *Diameter at bearing and for sheave bore.*

NOTE: All dimensions subject to change without notice. Where exact dimensions are required write for certified drawings.

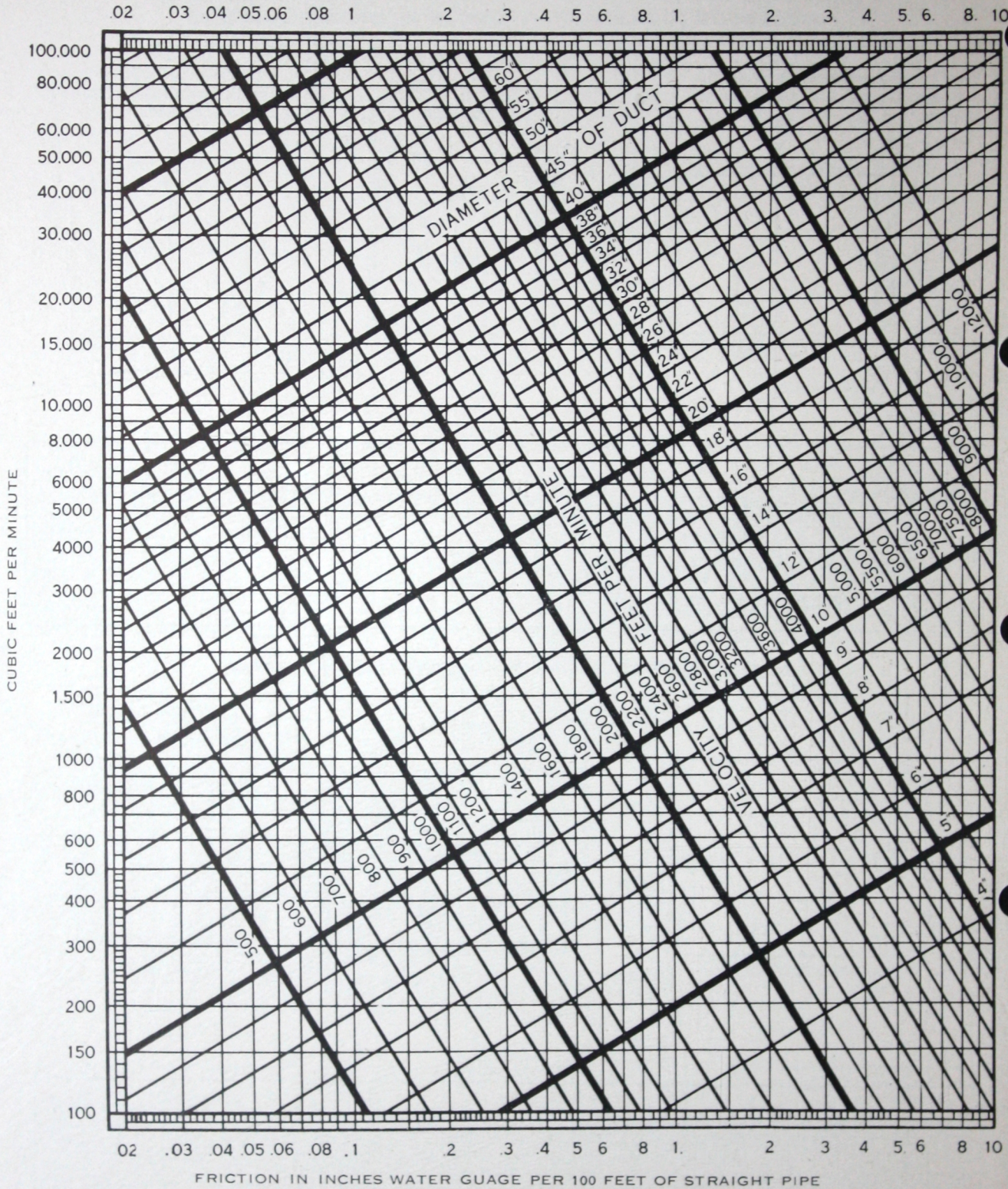

FRICTION CHART FOR CIRCULAR DUCTS

FIGURE 37

TABLE 64 — CIRCULAR EQUIVALENTS OF RECTANGULAR DUCTS FOR EQUAL FRICTION

From Chapter 30 Heating Ventilating Air Conditioning Guide 1940

SIDE RECTAN. DUCT	4	5	6	7	8	9	10	11	12	13	14	15	16	17	18	19	20	21	22	24	26	28	30	32	34	36	38	40	42	44	46	48
8	6.1	6.9	7.6	8.2	8 8																											
9	6.5	7.3	8.0	8.7	9.3	9.9																										
10	6.8	7.7	8.4	9.2	9.8	10.4	11.0																									
11	7.1	8.0	8.8	9.6	10.2	10.9	11.5	12.1																								
12	7.4	8.3	9.2	10.0	10.7	11.4	12.0	12.6	13 2																							
13	7.6	8.7	9.6	10.4	11.1	11.8	12.5	13.1	13.7	14.3																						
14	7.9	8.9	9.9	10.8	11.5	12.3	12.9	13.6	14.3	14 9	15.4																					
15	8.2	9.2	10.2	11.1	11.9	12.7	13.4	14.1	14.7	15.3	16.0	16.5																				
16	8.4	9.5	10.5	11.4	12.3	13.1	13.8	14.5	15.2	15.8	16 5	17.1	17.6																			
17	8.6	9.8	10.8	11.8	12.6	13.5	14.2	15.0	15.7	16.3	17.0	17.6	18.2	18.7																		
18	8.9	10.0	11.1	12.1	13.0	13.8	14.6	15.4	16.1	16.8	17.4	18,1	18.7	19.2	19.8																	
19	9.1	10.3	11.4	12.4	13.3	14.2	15.0	15.8	16.5	17.2	17.9	18.6	19 2	19.8	20 4	20 9																
20	9.3	10.5	11.6	12.7	13.6	14.5	15.4	16.2	17.0	17.6	18.4	19.0	19.7	20.3	20.9	21.5	22.0															
22	9.7	11.0	12.1	13.2	14.2	15.2	16.1	16.9	17.8	18.5	19.2	19.9	20.6	21.3	21.9	22.5	23.1	23.6	24.2													
24	10.0	11.4	12.6	13.8	14.8	15.8	16.8	17.6	18.5	19.3	20.0	20.8	21.5	22.2	22.8	23.5	24.0	24.7	25.2	26.4												
26	10.4	11.8	13.1	14.3	15.4	16.4	17.3	18.3	19.2	20.0	20.8	21.6	22.3	23.0	23 8	24.4	25.1	25.7	26.3	27.5	28.6											
28	10.8	12.2	13.5	14.8	15.9	17.0	18.0	19.0	19.8	20.7	21.5	22.4	23.1	23.9	24.6	25.3	26.0	26.6	27.3	28.5	29 7	30.8										
30	11.0	12.6	13.9	15.2	16.4	17.5	18.5	19.5	20.5	21.4	22.2	23.1	23 9	24.7	25.4	26.2	26.8	27.5	28.2	29 5	30.7	31.9	33.0									
32	11.3	12.9	14.3	15.6	16.9	18.0	19.1	20.1	21.1	22.0	22.9	23.8	24.6	25.4	26.2	27.0	27.7	28.4	29.1	30.5	31.7	32.9	34.1	35.2								
34	11.6	13.2	14.7	16.1	17.3	18.5	19.6	20.7	21.6	22.6	23.5	24.4	25.3	26.2	26.9	27.7	28.5	29.2	30.0	31.3	32.7	33.9	35.1	36 3	37.4							
36	11.9	13.6	15.1	16.4	17 7	19.0	20.1	21.2	22.2	23 2	24.2	25.1	26.0	26.8	27.7	28.5	29.3	30.0	30.8	32.2	33.7	34.9	36.1	37.3	38.5	39.6						
38	12.2	13.9	15.4	16.8	18.2	19.4	20.6	21.7	22.8	23.8	24.8	25.8	26.7	27.5	28.4	29.2	30.0	30.8	31.5	33.1	34.6	35.9	37.1	38.4	39.5	40.7	41.8					
40	12 5	14.3	15.7	17.2	18.6	19.8	21.1	22.2	23.3	24.4	25 4	26.4	27.3	28.2	29.1	29.9	30.8	31.6	32.4	33.9	35.3	36.7	38.0	39.3	40 5	41.7	42.9	44.0				
42	12.7	14.5	16.1	17.6	19.0	20.3	21.6	22.7	23.8	24.9	25.9	26.9	27 9	28.8	29.8	30.7	31.4	32.2	33.0	34.5	36.0	37.6	39.0	40.3	41.5	42.7	44.0	45.1	46.2			
44	13.0	14.8	16.4	18.0	19.4	20.7	22.0	23.1	24.3	25.4	26.5	27.5	28.5	29.5	30.3	31.2	32.1	32.9	33.7	35.3	36.9	38.5	39.9	41.2	42.5	43.7	44.9	46.1	47.2	48.4		
46	13 3	15.1	16.7	18.4	19.8	21.1	22.4	23.6	24.8	25.9	27.0	28.1	29.1	30.1	31.0	31.9	32.8	33.8	34.6	36.2	37.8	39.3	40 8	42.2	43.5	44.8	46.0	47.2	48.4	49 5	50.6	
48	13.5	15.4	17.0	18.7	20.1	21.5	22.8	24 1	25.2	26.4	27.5	28.6	29.6	30.5	31.6	32.5	33.4	34.3	35.2	37.0	38.5	40.0	41.5	43 0	44.4	45.6	46.9	48.1	49.3	50.5	51.6	52.8
50	13.7	15.7	17.3	19.0	20.4	21.9	23.2	24.5	25.7	26.9	28.0	29.2	30.3	31.3	32.2	33.1	34.1	35.0	35.9	37 6	39.2	40.8	42.3	43.8	45.2	46 5	47 9	49 1	50.4	51 6	52.9	54.0
52	13.9	15.9	17.6	19.2	20.8	22.2	23.6	24.9	26.2	27.4	28.5	29.6	30.7	31.8	32.9	33.8	34.7	35.6	36.5	38.3	40.0	41.6	43.1	44.7	46.1	47.5	48.9	50 1	51 3	52.5	53.8	55.0
54	14.1	16.1	17.9	19.6	21.1	22.6	24.0	25.3	26.6	27.8	29.0	30.1	31.2	32.3	33.4	34.4	35.3	36.3	37.2	38.9	40.7	42.4	44.0	45.5	47 0	48.4	49.9	51 1	52.3	53 5	54 8	56 0
56	14.3	16.3	18 2	19.9	21.5	22.9	24.4	25.7	27.0	28.3	29.5	30.6	31 7	32.8	33.9	34.9	35 9	36.9	37.8	39.6	41.3	43 0	44.6	46.2	47 7	49,1	50 6	52.0	53.3	54.6	55.9	57.0
58	14.6	16 6	18 4	20.2	21.8	23.3	24.7	26.1	27.4	28.7	30.0	31.1	32 2	33.3	34.4	35.4	36.4	37.4	38.4	40.3	42.1	43.8	45.4	47 0	48 5	50,0	51.5	52.9	54 2	55.5	56.8	58.0
60	14.7	16.8	18.7	20.4	22.1	23.6	25.1	26.5	27.8	29.1	30 5	31.6	32.7	33.8	34.9	36 1	37.1	38.1	39.1	40.9	42.7	44.5	46.1	47.8	49.3	50.9	52.3	53 8	55.0	56.4	57.7	58.9
62	15.0	17.0	19.0	20.7	22.4	24.0	25.5	26.9	28 2	29.5	30.9	32.1	33.2	34.3	35.4	36.6	37.7	38.7	39.6	41.6	43.4	45.1	46.8	48.4	50 0	51.7	53.0	54.5	55.9	57.2	58.5	59.7
64	15 1	17.3	19.2	21.0	22.7	24.3	25.9	27.3	28.6	29.9	31.3	32.6	33.7	34 8	35.9	37.1	38.2	39.2	40.2	42.2	44.0	45.8	47.5	49.2	50 9	52.4	53.9	55.4	56 8	58.1	59.4	60 6
66	15.3	17.5	19.5	21.2	23 0	24.6	26.2	27.7	29.0	30.3	31.7	33.0	34.2	35.3	36.4	37.6	38.7	39.8	40.8	42.8	44.7	46.5	48.2	50.0	51.6	53.1	54.7	56.2	57.6	59.1	60.4	61.6
68																					45 3	47.2	48.9	50 7	52.2	53 8	55.5	56.9	58.4	59 9	61.3	62.6
70																					46 0	47.8	49.5	51 3	52.9	54.5	56.2	57.7	59.1	60 6	62.1	63 5
72																					46 5	48.4	50.1	51.9	53.7	55.4	57.0	58.7	60.0	61.3	63.0	64 5

ADDITIONAL SIZES: To find circular equivalents for smaller rectangular ducts than shown in table. Rule — Twice the sides of the rectangular duct is equivalent to twice the diameter of the round duct.

EXAMPLE: Require the equivalent of a duct 12″ x 3½″ — SOLUTION: 24″ x 7″=13.8″ round. (From Table) Then a 12″ x 3½″=6.9″ round.

NOTES ON DUCT CONSTRUCTION

Ducts should be rigidly made and sturdily supported.

Sharp elbows and bends are to be avoided whenever possible. When they cannot be avoided, it is advisable to install turning vanes or splitters in the duct. Square throat elbows are not recommended unless turning vanes are used, too. The radius of the throat should be kept substantially the same as the duct diameter. When calculating the friction of a duct, it is necessary to allow an equivalent length of ten diameters of straight duct for every 90° elbow.

In order to realize full recovery of velocity pressure at outlet of FC Fans, it is important to keep the discharge duct reasonably straight for a short distance from the fan outlet before making any abrupt change in area or direction. One or one and a half diameters in length is usually sufficient.

When changes in duct area are necessary, it is desirable that the transformation pieces be made as long as possible. The angle between the sides and axis of the duct should never exceed 30% and more satisfactory operation will be obtained if this angle is held to 15° or less.

It is desirable to maintain a true cross-section with the air flow as unrestricted as possible in transformations and elbows.

Circular ducts create the least possible resistance to air flow. Square ducts are next to circular as far as resistance is concerned and are preferred over rectangular ducts. When it is necessary to use rectangular ducts, it is desirable to hold the sides as close to equal as possible. Good practice limits the ratio of the short side of the duct to the long side to 1 to 3 and a ratio greater than 1 to 4 should be avoided.

Sheet metal ducts will create less resistance than ducts made of other materials. Where other rougher material is used, allowance must be made for the increased resistance.

Where inlet boxes are used, the side opposite the fan inlet should be kept at least 60% of the fan diameter distant from the fan side.

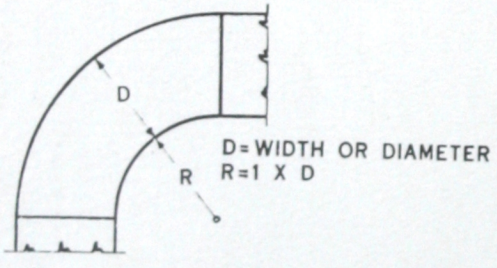

FIGURE 38
90° Elbow

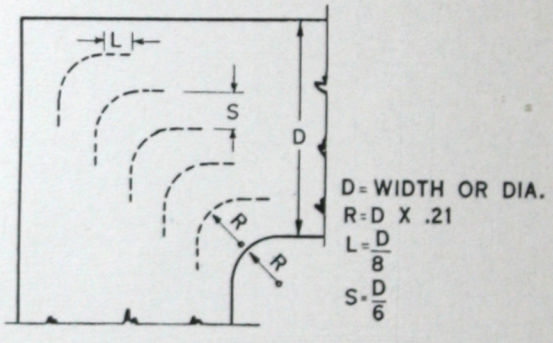

FIGURE 39
90° Duct Turn

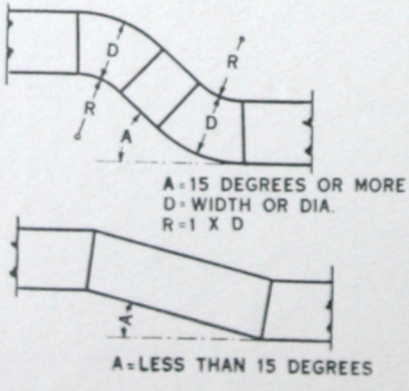

FIGURE 40
Duct Offsets

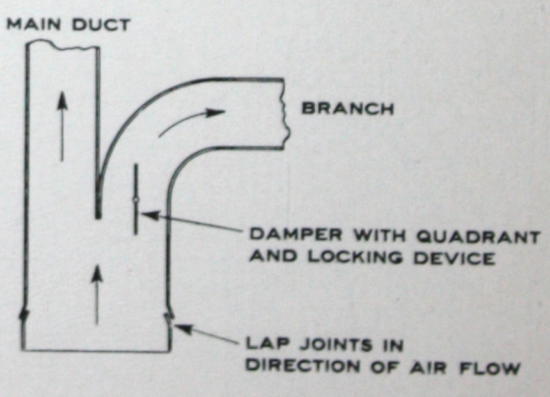

FIGURE 41
Branch Duct Arrangement

BASIC FAN LAWS

Both the application engineer and the installation contractor encounter many problems which must be solved in the field. Practically all of these problems can be solved with a minimum of effort by proper application of the fan laws given below.

Problems regarding application and installation of ventilating units can be solved by using the first six laws. The balance of the laws are useful in designing fans, checking ratings and establishing fan tables.

The first three laws are used to determine speed and power requirements of a fan when it is necessary to increase or decrease the air volume. If the present air volume and power is known, the proper fan speed and motor horsepower for the new condition can easily be calculated by means of Fan Laws 1, 2 and 3.

The second three laws when used in connection with the chart of Air Density Ratios shown in Figure 33, page 13, assure the correct fan selection wherever air density other than standard is encountered.

Equipped with a working knowledge of these six fan laws, the field man is able to analyze fan applications more accurately, to convert present fan installations to new conditions or service existing installations to perform effectively.

When a fan is operated on a given system the following relations apply:

Constant Air Density, Variation in RPM

1. **Cfm varies directly as the speed ratio** $\frac{CFM_1}{CFM}=\frac{RPM_1}{RPM}$
2. **Pressures vary directly as the square of the speed ratio** $\frac{P_1}{P}=\left(\frac{RPM_1}{RPM}\right)^2$
3. **Horsepower varies directly as the cube of the speed ratio** $\frac{HP_1}{HP}=\left(\frac{RPM_1}{RPM}\right)^3$

Constant RPM, Varying Air Density

4. **Cfm remains constant.**
5. **Pressures vary directly with air density** $\frac{P_1}{P}=\frac{d_1}{d}$
6. **Horsepower varies directly with air density** $\frac{HP_1}{HP}=\frac{d_1}{d}$

Constant Tip Speed of Wheel, Variation in Fan Size

7. **Pressures remain constant.**
8. **Cfm varies as the square of the wheel diameter** $\frac{CFM_1}{CFM}=\left(\frac{D_1}{D}\right)^2$
9. **Horsepower varies as the square of the wheel diameter** $\frac{HP_1}{HP}=\left(\frac{D_1}{D}\right)^2$
10. **Rpm varies inversely as the wheel diameter** $\frac{RPM_1}{RPM}=\frac{D}{D_1}$

Constant RPM, Variation in Fan Size

11. **Cfm varies as cube of wheel diameter** $\frac{CFM_1}{CFM}=\left(\frac{D_1}{D}\right)^3$
12. **Pressures vary as square of wheel diameter** $\frac{P_1}{P}=\left(\frac{D_1}{D}\right)^2$
13. **Horsepower varies as fifth power of wheel diameter** $\frac{HP_1}{HP}=\left(\frac{D_1}{D}\right)^5$

Variation in Fan Size and Speed

14. **Cfm varies as cube of wheel diameter $\times$ speed ratio** $\frac{CFM_1}{CFM}=\left(\frac{D_1}{D}\right)^3\times\frac{RPM_1}{RPM}$
15. **Pressures vary as square of wheel diameter $\times$ square of speed ratio** $\frac{P_1}{P}=\left(\frac{D_1}{D}\right)^2\times\left(\frac{RPM_1}{RPM}\right)^2$
16. **Horsepower varies as wheel diameter^5 $\times$ speed ratio^3** $\frac{HP_1}{HP}=\left(\frac{D_1}{D}\right)^5\times\left(\frac{RPM_1}{RPM}\right)^3$

SAMPLE SPECIFICATIONS

The following specifications are offered for use by architects and engineers in order to establish a standard for bidders:

Type FC Fans

Furnish and install where shown on plans Trane or equal fans of the capacities and sizes listed on plans. Indicated wheel diameters are minimum, and in no case shall tip speeds or outlet velocities be exceeded.

These fans shall be of the forward curved multiblade type designed for the highest volumetric efficiency and conservation of space.

Housings shall be of the volute form constructed of cold rolled steel and braced to eliminate vibration. Inlets and outlets are to be properly drilled and arranged so that duct connections can be readily made.

Housings on all fans of 30″ wheel diameter and smaller shall be of lockseam construction and convertible for various directions of discharge.

When wheel diameters are larger than 30″, housing assemblies shall be bolted permitting fans to be knocked down and reassembled. Side plates and apron sheets shall extend to base angles, forming box type base. Housings of 66″ fan and larger shall be split horizontally.

Wheels shall be of the back plate and hub construction having not less than 64 forward curved die-formed blades with blades, rims and back plates carefully constructed of cold rolled steel. On wheel diameters 8″ and smaller, the minimum number of blades shall be 48.

Hubs shall be of cast iron with suitable curvature to direct flow of air to blades. The entire wheel design and assembly must conform to latest standards of aero-dynamic design and be accurately balanced. The right is reserved to reject any wheel not properly balanced.

Use Paragraph 1 or 2.

1. Fans shall be equipped with precision ball bearings of the self-aligning, grease-packed pillow-block type mounted on steel cross arms rigidly braced. Bearings shall be built with a grease seal that will prevent loss of lubricant and exclude dirt from bearing.

2. Fans with shafts $1\frac{7}{16}$″ diameter and larger at bearings shall be equipped with oil ring lubricated precision built, babbitted, self-aligning pillow block sleeve bearings. Bearings sizes through $2\frac{15}{16}$″ shall have one oil ring, larger bearings shall have two oil rings. Graphite insert phosphor bronze, self-aligning pillow block bearings shall be furnished on fans with shafts smaller than $1\frac{7}{16}$″ in diameter.

All shafts shall be of .30 carbon hot rolled steel properly turned and accurately ground to size. Key seats are to be carefully and accurately cut.

Shaft diameters, sizes of base angles, and reinforcing angles, and all gauges of steel shall be of recognized standards, and in no case less than recommendations set forth by the National Association of Fan Manufacturers. All ratings are to be from tests carried out in accordance with the Test Code of the National Association of Fan Manufacturers.

Shop drawings, including statement of working conditions for each fan, shall be submitted for approval before fabrication.

Type BI Fans

Furnish and install where shown on plans Trane or equal fans of the capacities and sizes listed on plans. Indicated wheel diameters are minimum, and in no case shall tip speeds or outlet velocities be exceeded.

These fans shall be of the backward curve blade design with non-overloading power characteristics.

Housings shall be of the volute form constructed of cold rolled steel and rigidly braced to eliminate vibration. Inlets and outlets are to be properly drilled and arranged so that duct connections can be readily made.

Housings on all fans of 30″ wheel diameter and smaller shall be of lockseam construction and convertible for various directions of discharge.

When wheel diameters are larger than 30″, housing assemblies shall be bolted permitting fans to be knocked down and reassembled. Side plates and apron sheets shall extend to base angles, forming box type base. Housings of 66″ fan and larger shall be split horizontally.

Wheels shall be of the back plate and hub construction having not less than 12 backwardly inclined blades, with blades, rims and back plates carefully constructed of cold rolled steel.

Hubs shall be of cast iron with suitable curvature to direct the flow of air to the blades. The entire wheel design and assembly must conform to the latest standards of aero-dynamic design and be accurately balanced. The right is reserved to reject any wheel not properly balanced.

Use Paragraph 1 or 2.

1. Fans shall be equipped with precision ball bearings of the self-aligning, grease-packed pillow-block type mounted on steel cross arms rigidly braced. Bearings shall be built with a grease seal that will prevent loss of lubricant and exclude dirt from bearing.

2. Fans with shafts $1\frac{7}{16}$″ diameter and larger at bearings shall be equipped with oil ring lubricated precision built, babbitted, self-aligning pillow block sleeve bearings. Bearings sizes through $2\frac{15}{16}$″ shall have one oiling ring, larger bearings shall have two oiling rings. Graphite insert phosphor bronze, self-aligning pillow block bearings shall be furnished on fans with shafts smaller than $1\frac{7}{16}$″ in diameter.

All shafts shall be of .30 carbon hot rolled steel properly turned and accurately ground to size. Key seats are to be carefully and accurately cut.

Shaft diameters, sizes of base angles, and reinforcing angles, and all gauges of steel shall be of recognized standards, and in no case less than recommendations set forth by the National Association of Fan Manufacturers. All ratings are to be from tests carried out in accordance with the Test Code of the National Association of Fan Manufacturers.

Shop drawings, including statement of working conditions for each fan, shall be submitted for approval before fabrication.

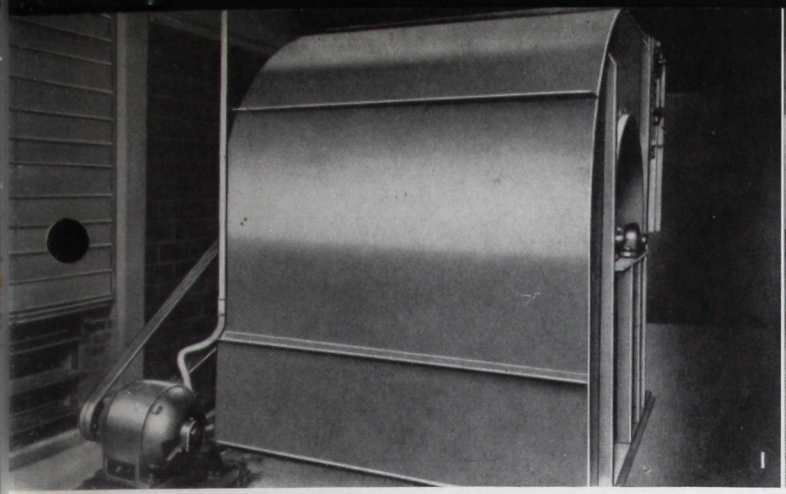

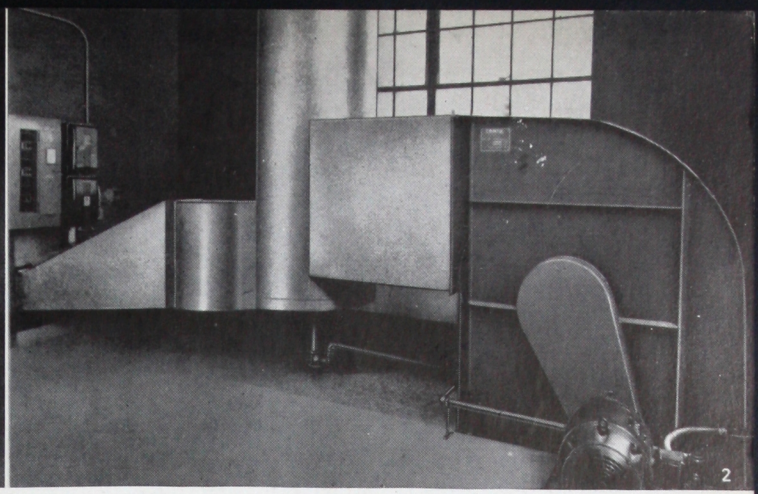

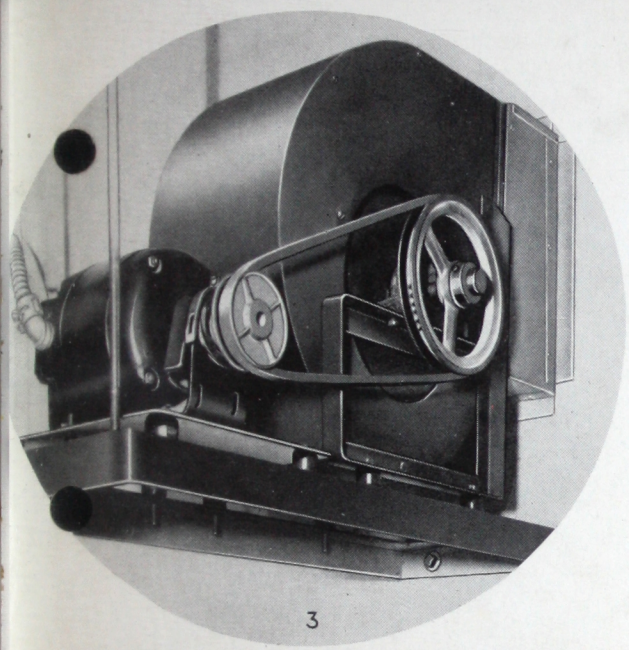

1. Installed in a separate building this 60″ Double Width Fan ventilates a large assembly building.

2. A No. 44 Forward Curved Fan used to handle gases in a process application.

3. A 24″ Forward Curved Fan mounted on a steel platform suspended from ceiling. Rubber isolators eliminate vibration transmission.

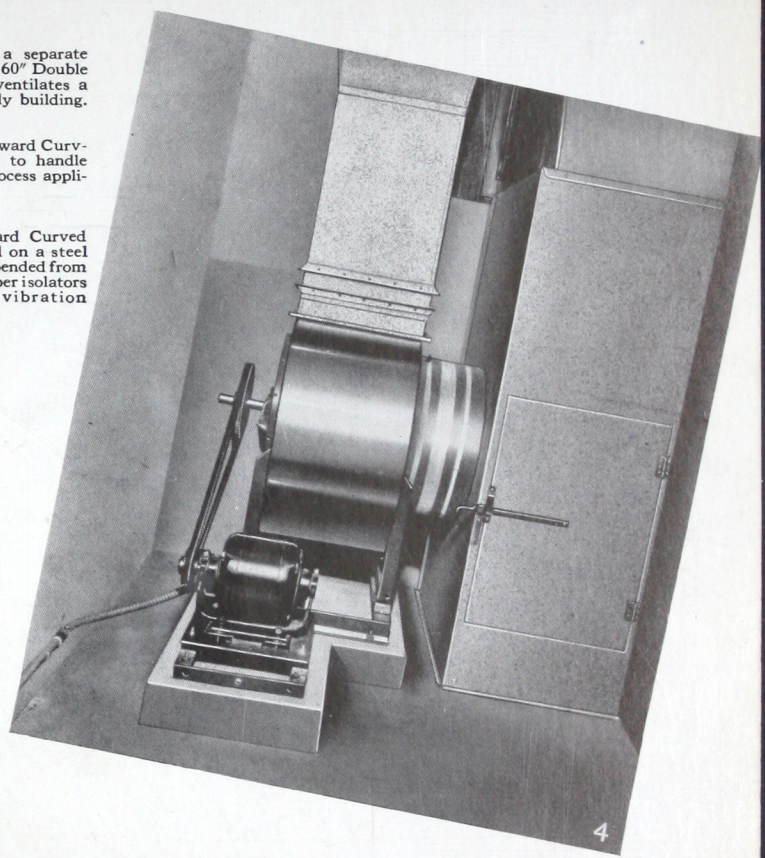

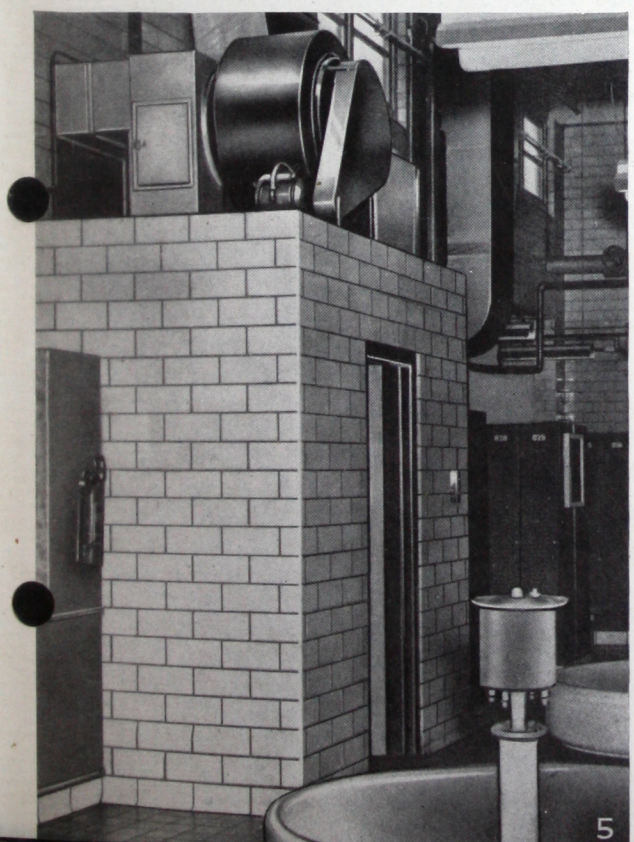

4. A No. 24 Single Width Single inlet Forward Curved Fan mounted on a Trane Fan Base. Note good duct construction: canvas connection on inlet and discharge, straight run of duct for at least 1½ diameters from fan discharge, good inlet connection.

5. Small forward Curved Fan used to exhaust vapour from employees' shower room.

6. Two Trane Fans are used to air-condition office space in this factory. One fan supplies the conditioned air, the other exhausts air.

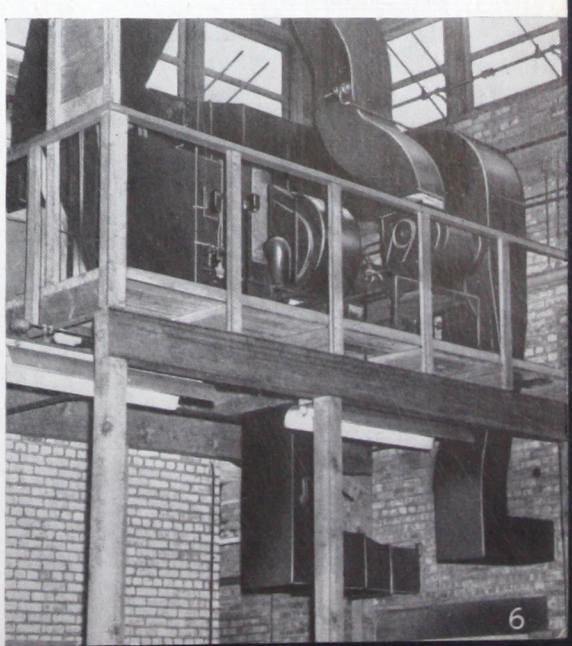

TRANE HEATING *and* COOLING COILS

used in conjunction with Trane Fans for Heating, Cooling, Ventilating and Industrial Process Applications

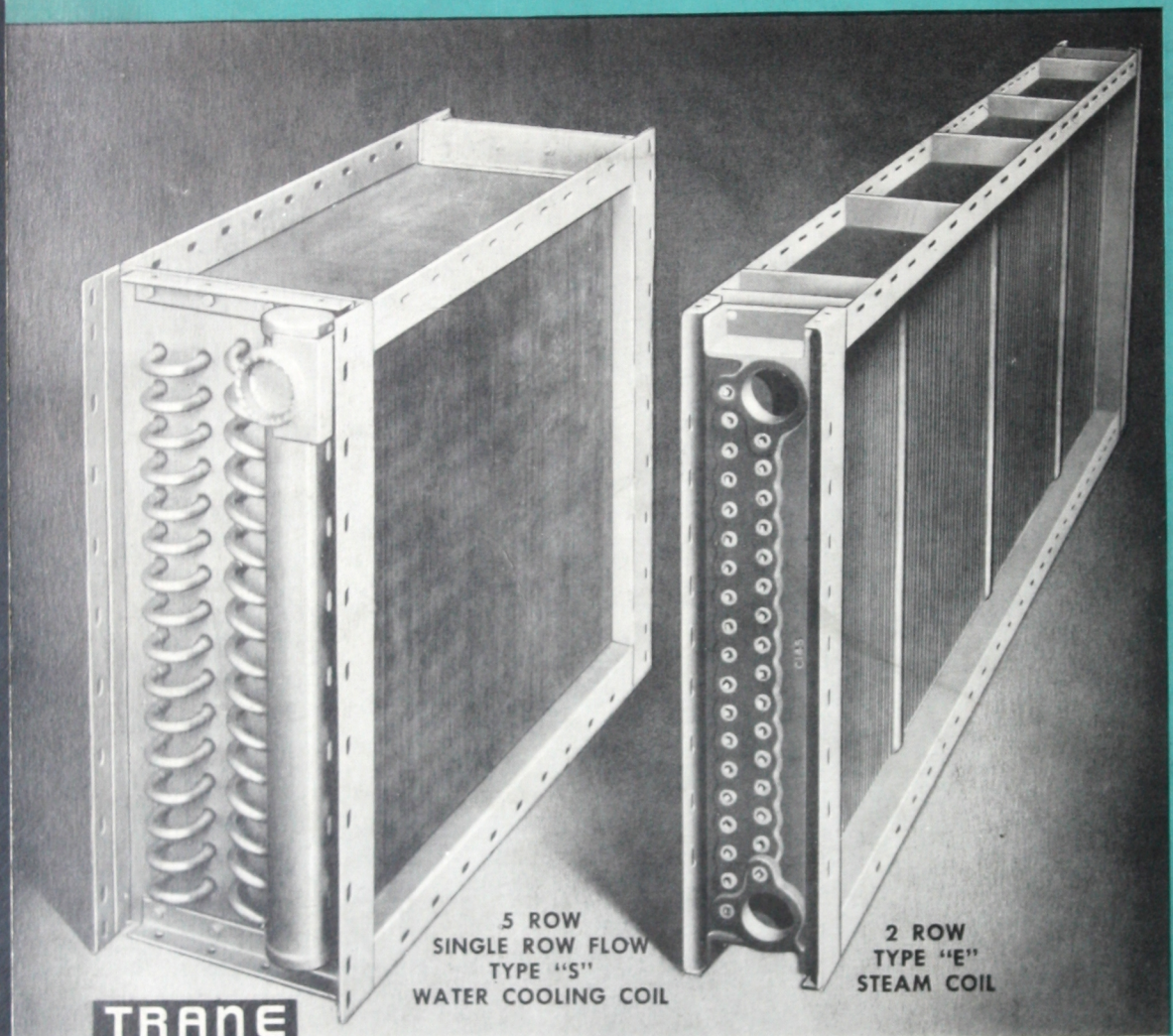

5 ROW
SINGLE ROW FLOW
TYPE "S"
WATER COOLING COIL

2 ROW
TYPE "E"
STEAM COIL

TRANE

* HEATING * COOLING
* AIR CONDITIONING

TRANE COMPANY OF CANADA LIMITED

HEAD OFFICE AND FACTORY:
4 Mowat Avenue, Toronto 1, Ontario

OFFICES FROM COAST TO COAST

VANCOUVER
CALGARY
REGINA
WINNIPEG
WINDSOR
HAMILTON
KIRKLAND LAKE
OTTAWA
MONTREAL
QUEBEC
HALIFAX